HYDROGEOLOGIC DATA AND AQUIFER INTERCONNECTION IN A MULTI-AQUIFER SYSTEM IN COASTAL PLAIN SEDIMENTS NEAR MILLHAVEN, SCREVEN COUNTY, GEORGIA, 1991-95

by

John S. Clarke, William F. Falls, Lucy E. Edwards, Norman O. Frederiksen, Laurel M. Bybell, Thomas G. Gibson, Gregory S. Gohn, and Farley Fleming

U.S. Geological Survey

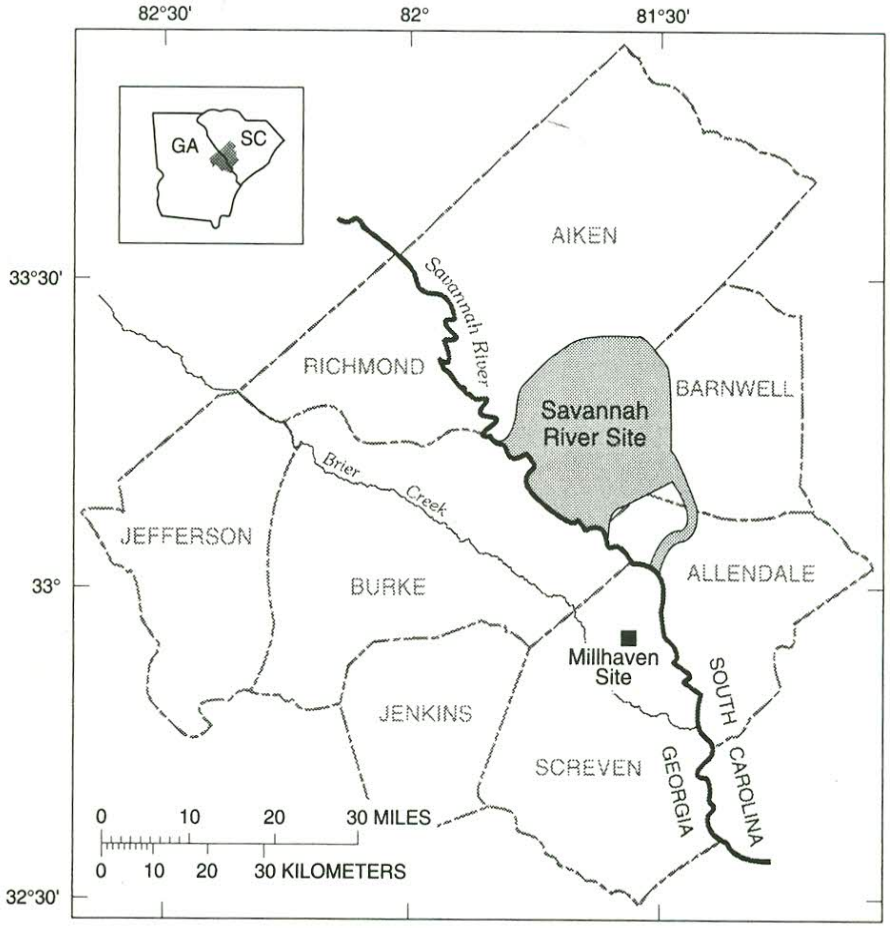

Prepared in cooperation with the

U.S. DEPARTMENT OF THE INTERIOR
U.S. GEOLOGICAL SURVEY

U.S. DEPARTMENT OF ENERGY

INFORMATION CIRCULAR 99

HYDROGEOLOGIC DATA AND AQUIFER INTERCONNECTION IN A MULTI-AQUIFER SYSTEM IN COASTAL PLAIN SEDIMENTS NEAR MILLHAVEN, SCREVEN COUNTY, GEORGIA 1991-95

by

John S. Clarke, William F. Falls, Lucy E. Edwards, Norman O. Frederiksen, Laurel M. Bybell, Thomas G. Gibson, Gregory S. Gohn, and Farley Fleming

GEORGIA DEPARTMENT OF NATURAL RESOURCES
Lonnie C. Barrett, Commissioner

ENVIRONMENTAL PROTECTION DIVISION
Harold F. Reheis, Director

GEORGIA GEOLOGIC SURVEY
William H. McLemore, State Geologist

Prepared in cooperation with the

U.S. DEPARTMENT OF THE INTERIOR
U.S. GEOLOGICAL SURVEY

U.S. DEPARTMENT OF ENERGY

Atlanta, Georgia

1996

INFORMATION CIRCULAR 99

CONTENTS

Page

Abstract 1
Introduction 2
    Purpose and scope 2
    Description of study area 2
    Well-numbering system 2
    Acknowledgments 4
Well construction and coring 4
Geologic data 8
    Lithology 8
    Micropaleontology 10
Hydrologic data 12
    Hydrogeologic units 12
    Hydraulic properties 13
        Hydraulic conductivity of core samples 13
        Aquifer tests 14
        Hydraulic conductivity estimated from borehole resistivity 15
    Ground-water levels 16
Water-quality data 19
Aquifer interconnection 24
Summary 25
Selected references 26
Appendix—-Lithologic description of Millhaven core 31

ILLUSTRATIONS

Page

[Plate is in pocket in back of report]

Plate 1. Chart showing lithology, geophysical logs, open intervals, and hydraulic properties in test wells at the Millhaven site, Screven County, Georgia

Figure 1. Map showing location of Millhaven site, test wells drilled at the site and other test sites 3
Figures 2-6. Schematic diagrams of:
2. Millhaven test well 1 5
3 Millhaven test well 2 6
4. Millhaven test well 3 6
5. Millhaven test well 4 7
6. Millhaven test well 5 7
Figure 7. Photograph showing subsidence during drilling of Millhaven test well 1. 8
Figure 8. Generalized correlation of units of Late Cretaceous through Eocene age in the southeastern United States 9
Figure 9. Hydrogeologic units in the vicinity of the Millhaven site.. 13
Figure 10. Hydrograph showing daily mean ground-water levels in Millhaven test wells 1, 2, and 3; daily mean stream stages at Savannah River near Millhaven (02197500) and Brier Creek near Millhaven (02198000); and precipitation at Sylvania, Georgia, December 1993 to August 1995 17
Figure 11. Hydrograph showing daily mean ground-water levels in Millhaven test wells 4, and 5; daily mean stream stages at Savannah River near Millhaven (02197500) and Brier Creek near Millhaven (02198000); and precipitation at Sylvania, Georgia, December 1993 to August 1995. 18
Figure 12. Bargraphs showing the distribution of selected chemical properties and constituent concentrations by water-bearing unit at the Millhaven site, January 24-25, 1995 22
Figure 13. Trilinear diagram showing percentage composition of major ionic constituents in ground water at the Millhaven site, January 24-25, 1995 23

TABLES

Table 1. Well-construction and water-level data for test wells at the Millhaven site, Screven County, Georgia. 5
2. Hydraulic properties of selected core samples from the Millhaven site. 14
3. Aquifer-test analyses at the Millhaven site, October-December, 1994. 15
4. Horizontal hydraulic conductivity estimates determined from formation resistivity logs at the Millhaven site. 16
5. Statistical comparison of precipitation and stream-stage data to ground-water levels at the Millhaven site. 19
6. Chemical and physical characteristics of ground water sampled from test wells at the Millhaven site. 20
7. Drawdown response in pumped and observation wells during aquifer tests at the Millhaven site.. . . . 24

CONVERSION FACTORS, ACRONYMS AND ABBREVIATIONS, AND VERTICAL DATUM

CONVERSION FACTORS

Multiply	by	to obtain
	Length	
inch (in.)	25.4	millimeter
foot (ft)	0.3048	meter
mile (mi)	1.609	kilometer
	Area	
square mile (mi^2)	2.590	square kilometer
	Volume	
gallon (gal)	3.785	liter
	Flow	
gallon per minute (gal/min)	0.06309	liter per second
	Concentration	
part per million	1	milligrams per liter (mg/L)
	1,000	micrograms per liter (µg/L)
picocurie per liter (pCi/L)	3.19	tritum unit
	Specific conductance	
micromho per centimeter at 25 ° Celsius (µmhos/cm at 25 ° C)	1	microsiemens per centimeter at 25 ° Celsius (µS/cm at 25 ° C)

Temperature

Temperature in degrees Fahrenheit (° F) can be converted to degrees Celsius (° C) as follows:

° C = 5/9 (° F -32)

ACRONYMS AND ABBREVIATIONS

ASTM	American Society for Testing and Materials
BE	Barometric efficiency
EPA	U.S. Environmental Protection Agency
EPD	Georgia Environmental Protection Division
DIC	Dissolved inorganic carbon
DNR	Georgia Department of Natural Resources
DOE	U.S. Department of Energy
GSA	Geological Society of America
PVC	Polyvinylchloride
SRS	Savannah River Site
TOC	Total organic carbon
USGS	U.S. Geological Survey

VERTICAL DATUM

Sea level: In this report, "sea level" refers to the National Geodetic Vertical Datum of 1929—a geodetic datum derived from a general adjustment of the first-order level nets of the United States and Canada, formerly called "Sea Level Datum of 1929".

HYDROGEOLOGIC DATA AND AQUIFER INTERCONNECTION IN A MULTI-AQUIFER SYSTEM IN COASTAL PLAIN SEDIMENTS NEAR MILLHAVEN, SCREVEN COUNTY, GEORGIA, 1991-95

by

John S. Clarke[1/], William F. Falls[1/], Lucy E. Edwards[1/], David Bukry[1/], Norman O. Frederiksen[1/], Laurel M. Bybell[1/], Thomas G. Gibson[1/], Gregory S. Gohn[1/], and Farley Fleming[1/]

ABSTRACT

The Millhaven site, located in northeastern Screven County, Georgia, was developed during 1991-94 to better characterize the geologic, hydrologic, and water-quality characteristics of a multi-aquifer system in Coastal Plain sediments as part of an evaluation of ground-water flow and stream-aquifer relations in the vicinity of the U.S. Department of Energy, Savannah River Site. The test site consists of a 1,452-foot deep corehole drilled into sediments of Late Cretaceous age, and five test wells developed at depths ranging from 50 to 1,380 feet. Data from the test wells are presented for 1991-95. Examination of the lithology and paleontology of core indicated that Coastal Plain sediments in the vicinity of the site are of Late Cretaceous through Eocene age, deposited mostly under marine, nearshore marine, or nonmarine environments. The test wells were screened in the Floridan aquifer system, Dublin aquifer system, and Midville aquifer system.

Vertical hydraulic conductivity determined from hydraulic analysis of core was 1.15×10^{-5} to 1.19×10^{-1} feet per day (ft/d) in the upper Dublin confining unit, and from 2.83×10^{-6} (estimated) to 1.4×10^{-3} ft/d in the upper Midville confining unit. Horizontal hydraulic conductivity determined from aquifer tests and estimated from borehole resistivity logs was 13 to 70 ft/d in the Upper Floridan aquifer, 42 ft/d in the Gordon aquifer, 7 ft/d in the Millers Pond aquifer, 22 ft/d in the upper Dublin aquifer, and 10 to 22 ft/d in the lower Dublin aquifer.

Water-level measurements indicate a general upward head gradient at the Millhaven site, indicative of an area of potential upward discharge. The water level in the Upper Floridan aquifer responded to extreme changes in Savannah River and Brier Creek stages and showed little response to precipitation at Sylvania, Ga. Water levels in the lower Dublin and lower Midville aquifers responded little to precipitation, or to Savannah River or Brier Creek stages.

Water sampled from each of the five water-bearing zones completed at the Millhaven site is soft, low in dissolved solids, and, with the exception of high concentration of iron in the lower Dublin aquifer, is considered to be suitable for most uses. Water in the lower zone of the Upper Floridan aquifer may be distinguished from water in the upper and middle zones of the Upper Floridan by higher concentrations of dissolved solids, alkalinity as $CaCO_3$, silica, calcium, magnesium, and strontium. Water in the Upper Floridan aquifer may be distinguished from water in the underlying lower Dublin and lower Midville aquifers by higher concentration of calcium and lower concentration of sodium. Water in the lower Dublin aquifer may be distinguished from water in the underlying lower Midville aquifer by its higher concentrations of iron, manganese, potassium, chloride, and sulfate.

The upper and middle zones of the Upper Floridan aquifer are hydraulically well connected at the Millhaven site, as evidenced by minimal head difference

[1/]U.S. Geological Survey.

between the zones, similarity of water-level fluctuations and trends, drawdown response during aquifer tests, and similarities in water chemistry. The lower zone of the Upper Floridan aquifer is hydraulically separated from the overlying middle zone as was indicated by differences in water quality, a slight upward head gradient, and differences in water-level fluctuations between the lower zone and the upper two zones. Although hydraulically separated under static conditions, interaquifer leakage between the lower zone and the upper two zones was indicated by drawdown response during aquifer tests.

INTRODUCTION

The U.S. Department of Energy (DOE), Savannah River Site (SRS), has manufactured nuclear materials for the National defense since the early 1950's. A variety of hazardous materials including radionuclides, volatile organic compounds, and heavy metals, are either disposed of or stored at several locations at the SRS. Contamination of ground water has been detected at several locations within the SRS. Concern has been raised by State of Georgia officials over the possible migration of ground water contaminated with hazardous materials through aquifers underlying the Savannah River into Georgia (trans-river flow).

The U.S. Geological Survey (USGS), in cooperation with the U.S. Department of Energy (DOE) and Georgia Department of Natural Resources (DNR), is conducting a study to describe ground-water flow and quality near the Savannah River (trans-river flow project). The overall objectives of this study are to identify ground-water flow paths, quantitatively describe ground-water flow, and evaluate stream-aquifer relations between the Savannah River and underlying aquifers. Stream-aquifer relations are being evaluated to determine the potential movement beneath or discharge into the Savannah River. The potential for trans-river flow is being evaluated under modern (1992) conditions and under selected hypothetical pumping scenarios.

Geologic, hydrologic, and water-quality characteristics of aquifers and confining units are being characterized to support the analysis. Accordingly, a test-drilling program was initiated to establish geologic, hydrologic, and water-quality characteristics of Coastal Plain sediments near the Savannah River (fig. 1). Clusters of test wells are being constructed in major aquifers at several locations along the Savannah River in Georgia (fig. 1).

Purpose and Scope

The purpose of this report is to present geologic, hydrologic, and water-quality data determined by test drilling, and to determine the degree of aquifer interconnection between water-bearing zones at the Millhaven site in northeastern Screven County, Ga. Data collected include the depth, thickness, lithology, paleontology, hydraulic properties, and water chemistry of Coastal Plain aquifers at the site. These data, presented by graphs, tables, and diagrams, will assist in correlations of stratigraphy and flow-system characteristics, including aquifer hydraulic interconnections. Records of all data collected at the site are on file at the USGS, Atlanta, Ga.

Objectives of the test drilling were to (1) obtain core samples for geologic testing and paleontologic (fossil) examination; (2) obtain geophysical logs to aid in description and definition of the lithology and physical characteristics of sediments penetrated; (3) determine water quality from discrete water-bearing zones; and (4) determine pressure head at selected water-bearing intervals; (5) determine hydraulic properties of confining beds, (6) determine hydraulic properties of water-bearing zones; and (7) determine the degree of aquifer interconnection between water-bearing zones.

This is the second report describing results of the test-drilling program for the trans-river flow project. The first report (Clarke and others, 1994) described results of test drilling at the Millers Pond site (fig. 1) in northern Burke County, Ga.

Description of Study Area

Sediments in the Coastal Plain physiographic province consist of interbedded sand and clay with lesser amounts of limestone that dip southeastward forming a series of aquifers and confining units. Although data in South Carolina are plentiful, limited hydrologic, geologic, and water-quality data are available in Georgia to determine the characteristics of these aquifers and confining units adjacent to the Savannah River.

The Millhaven site is located in northeastern Screven County, about 17 miles (mi) northeast of Sylvania, Ga., about 28 mi southeast of Waynesboro, Ga., about 2 mi northeast of Brier Creek, and about 7 mi west of the Savannah River (fig. 1). Land-surface altitudes at the site range from about 110 to 111 ft above sea level, as determined by examination of the USGS Burtons Ferry Landing 7 1/2-minute topographic quadrangle map, and by on-site leveling. The site is located at latitude 32°53′25″ and longitude 81°35′43″.

Well-Numbering System

Each test well at the Millhaven site was numbered in order of drilling; that is, test well 1 (TW-1) was the first well completed, TW-2 was the second, and so forth. In addition to these site numbers, wells located in Georgia are numbered according to a system based on the USGS index to topographic maps of Georgia. Each 7 1/2-minute topographic quadrangle in the State has been

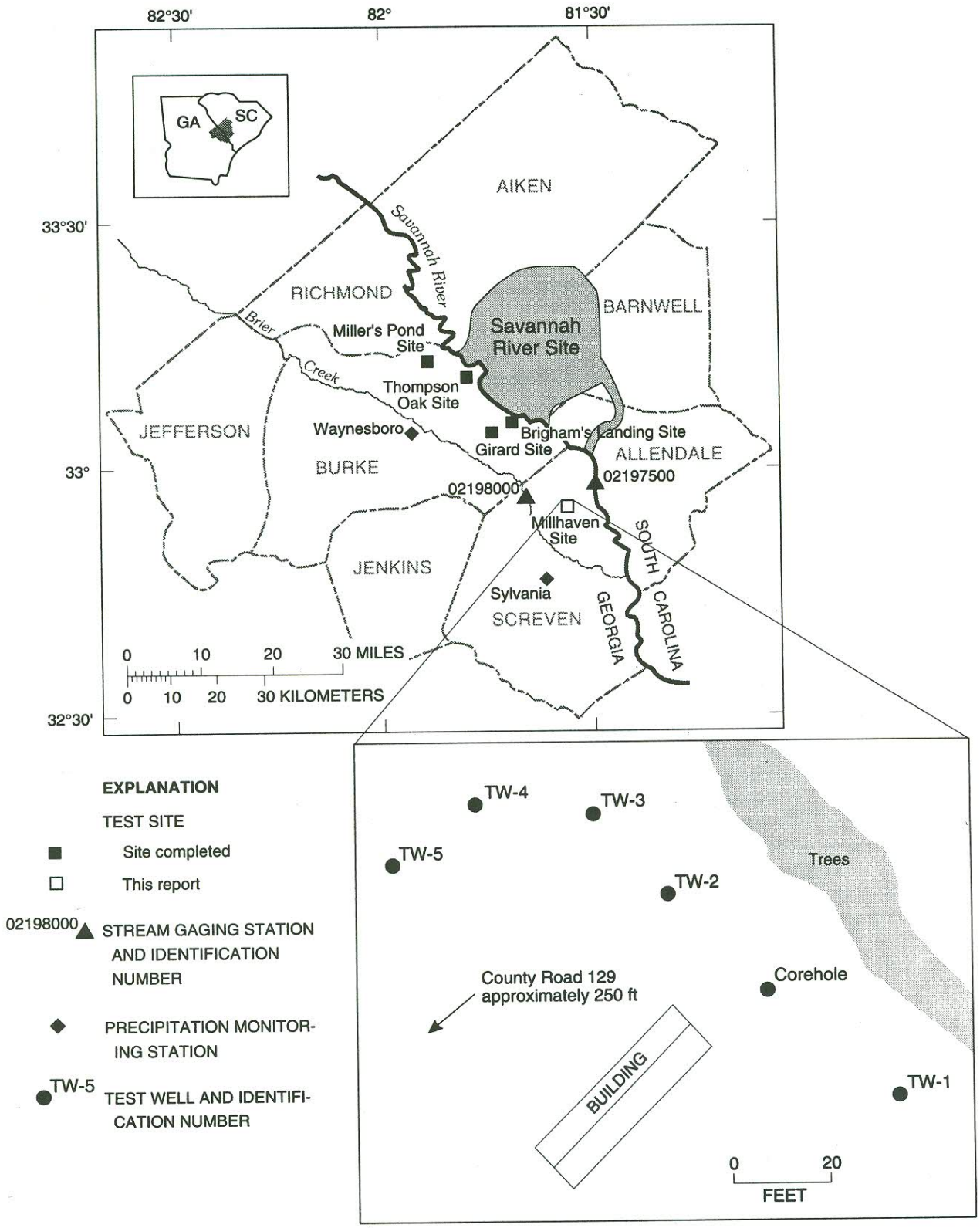

Figure 1. Location of Millhaven test site, test wells drilled at the site and other test sites and stations.

given a number and letter designation beginning at the southwestern corner of the State. Numbers increase eastward and letters increase alphabetically northward. Quadrangles in the northern part of the area are designated by double letters. The letters "I", "II", "O", and "OO" are omitted. Wells inventoried in each quadrangle are numbered sequentially beginning with 1. Thus, the 51st well numbered on the 33X quadrangle is designated 33X051.

Acknowledgments

The authors gratefully acknowledge the cooperation and assistance of Mr. Charles Gentry of Millhaven Plantation, Inc., who provided access to the Millhaven property. Appreciation is extended to Nicholas B. Kidd, Rex A. Hodges, and David C. Snipes of Clemson University for conducting and analyzing aquifer tests from the Millhaven site. Joan S. Baum, U.S. Department of Energy (formerly with USGS), evaluated horizontal hydraulic conductivity using borehole geophysical logs. David C. Prowell, geologist, USGS, provided valuable assistance and guidance regarding geologic interpretations.

WELL CONSTRUCTION AND CORING

Five test wells were installed at varying depths and continuous cores were collected at the Millhaven site to help characterize geologic, hydrologic, and water-quality characteristics of Coastal Plain sediments. During November 1991 through February 1992, a corehole was completed in Coastal Plain sediments of Late Cretaceous and Tertiary age at the Millhaven site. Continuous, 2-in. diameter core samples were collected from a depth of 6 ft to a total depth of 1,452 ft using the wire-line coring method. The core samples were used to determine lithology, grain size, sand/clay ratio, hydraulic properties, and environment of deposition. The paleontology of selected core samples provided age control for the time of deposition. Borehole geophysical logs were collected to aid correlation of units and to determine water-bearing properties of the sediments.

During drilling of the corehole (33X048), it was necessary to case the upper 577 ft of the borehole to prevent caving from sand zones. The 5-in. casing was emplaced in the hole and sealed in place from a depth of 577 ft to land surface using bentonite grout. Upon completion of drilling, the corehole was allowed to collapse to a depth of 611 ft, leaving a 577-611 ft open-hole interval. The corehole was sealed off at land surface with a locked cap for possible future modification into a test well.

Test wells were completed in five water-bearing intervals to help characterize the vertical distribution of hydraulic head, hydraulic properties, and water chemistry of Coastal Plain sediments at the Millhaven site. The intervals were determined by examination of core and geophysical logs and were bounded by clay beds of relatively lower permeability. The vertical position of the five intervals are shown on plate 1. Construction characteristics of the test wells are summarized in table 1, and are shown in plate 1 and figures 2-6. TW-1, TW-2, TW-4, and TW-5 were completed using wire-wrapped stainless-steel screen (figs. 2, 3, 5, and 6). TW-3 was completed in limestone using an open-hole construction (fig. 4). In TW-1, TW-2, and TW-4, a sand filter pack, bentonite seal, and grout were emplaced in the annular space using a tremie pipe. TW-5 was completed without a filter pack. Each test well was developed using air surging and jetting techniques. Development continued until the return water was free of drilling mud and sand.

TW-1 was completed in February 1993 using 6-in. diameter threaded and coupled polyvinyl chloride (PVC) casing to a depth of 50 ft, and stainless-steel screen from 50 to 80 ft. During drilling of TW-1, a significant loss of circulation was observed at a depth of about 20-25 ft, followed by development of a 3-ft deep depression covering an area of about 180 square feet (ft^2) at land surface (fig. 7). The lost circulation zone is indicated in a lithologic description of Millhaven core (see Appendix) as an interval without core recovery at 21-25 ft. Loss of circulation and corresponding subsidence resulted from caving of loosely consolidated sand into the lost circulation zone after the drill bit penetrated a layer of residual clay overlying it (Alan Hughes, Georgia Geologic Survey, written commun., 1993). Similar cavernous zones and associated drilling problems have been reported by local drillers. To seal off the loose sand overlying the cavernous zone, 14-in. diameter PVC surface casing was installed to a depth of 30 ft.

TW-2 was completed in April 1993 using 6-in. diameter threaded and coupled PVC casing to a depth of 155 ft, and stainless-steel screen from 155-205 ft. As was the case in TW-1, caving problems were encountered at a depth of about 20 ft. To seal off loose sand overlying the cavernous zone, a 14-in. diameter PVC surface casing was installed to a depth of 30 ft.

TW-3 was completed in May 1993 using 6-in. diameter threaded and coupled PVC casing to a depth of 225 ft, with an open borehole in limestone from 225 to 280.5 ft. In this procedure, 6-in. diameter casing is installed and pressure-grouted in place, and is then under reamed beneath the casing to expose an opening in the water-bearing limestone. As in TW-1 and TW-2, 14-in. diameter PVC surface casing was installed to a depth of 30 ft to avoid possible caving problems.

TW-4 was completed in September 1993 using 6-in. diameter, welded carbon-steel casing to a depth of 857 ft, and stainless-steel screen from 857 to 907 ft.

Table 1. Well-construction and water-level data for test wells at the Millhaven site, Screven County, Georgia
[Water-bearing unit: UF, Upper Floridan aquifer; MPC, Millers Pond confining; LD, lower Dublin aquifer; LM, lower Midville aquifer; Type: S, screened; OH, open hole casing]

Well numbers	Water-bearing unit	Altitude of land surface (feet)	Date of construction (month/year)	Well depth (feet)	Casing		Open or screened interval			Water level	
					Depth (feet)	Diameter (inches)	Type	Depth (feet)	Diameter (inches)	Above (+) or below (-) land surface (feet)	Date of measurement
TW-1 (33X051)	UF	110.04	02/93	88	0-30 0-50 80-88	14 6 6	S	50-80	6	-10.58	03/13/95
TW-2 (33X052)	UF	111.13	04/93	210	0-30 0-155 205-210	14 6 6	S	155-205	6	-11.56	03/13/95
TW-3 (33X053)	UF	111.08	05/93	280	0-30 0-225	14 6	OH	225-280.5	6	-8.85	03/13/95
TW-4 (33X054)	LD	110.93	09/93	912	0-51 0-857 907-912	16 6 6	S	857-907	6	+39.50	03/13/95
TW-5 (33X055)	LM	110.20	09/94	1,390	0-20 0-1,310 1,290-1,340 1,380-1,390	10 6 4 4	S	1,340-1,380	4	+75.00	03/13/95
Corehole (33X048)	MPC	110.0	02/92	577	577	5	OH	577-611	5	+12.65	03/13/95

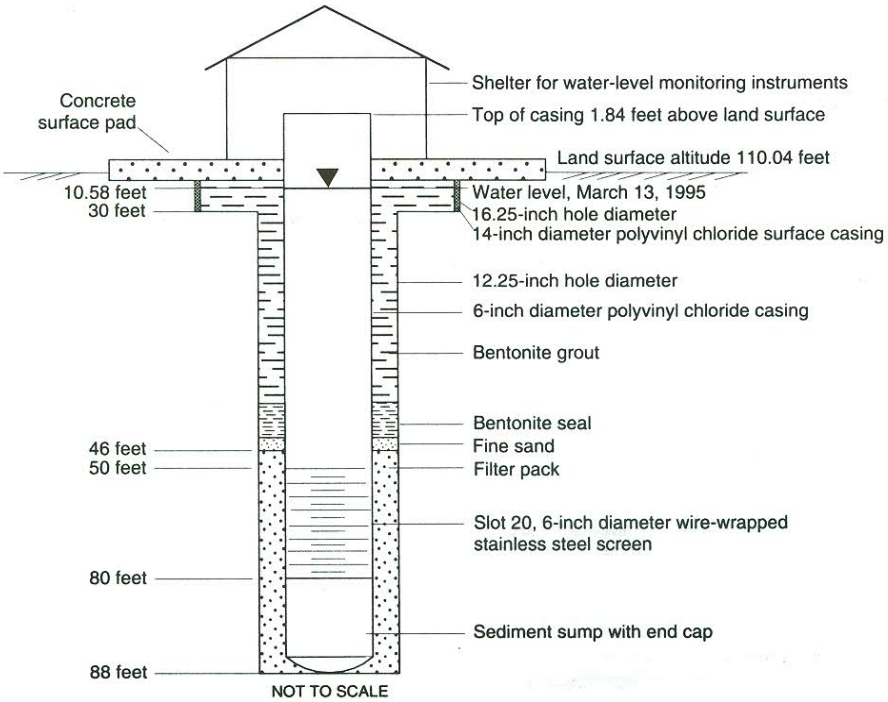

Figure 2. Schematic diagram of Millhaven test well TW-1. Footages are depths below land surface.

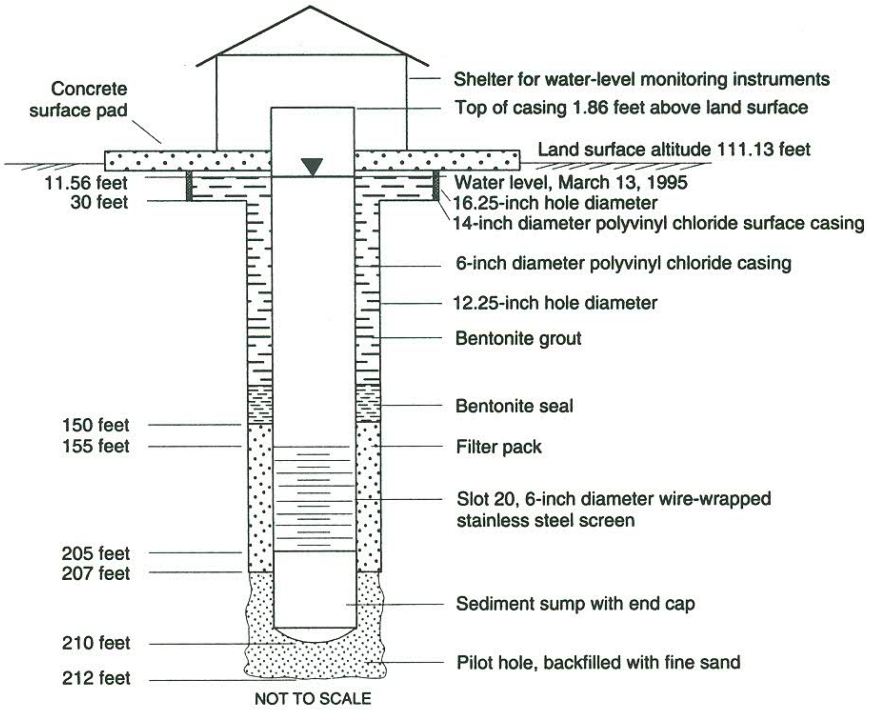

Figure 3. Schematic diagram of Millhaven test well TW-2. Footages are depths below land surface.

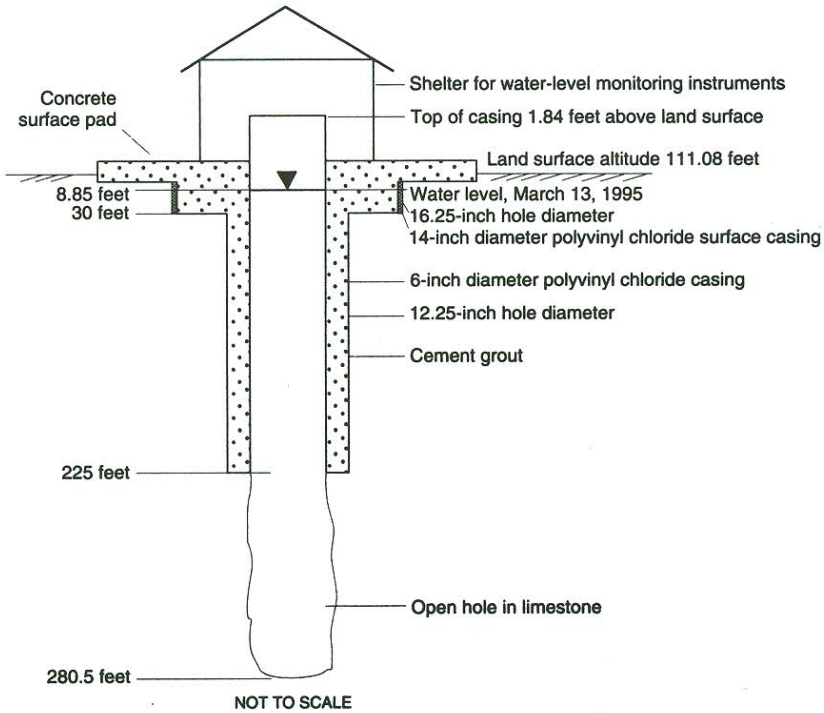

Figure 4. Schematic diagram of Millhaven test well TW-3. Footages are depths below land surface.

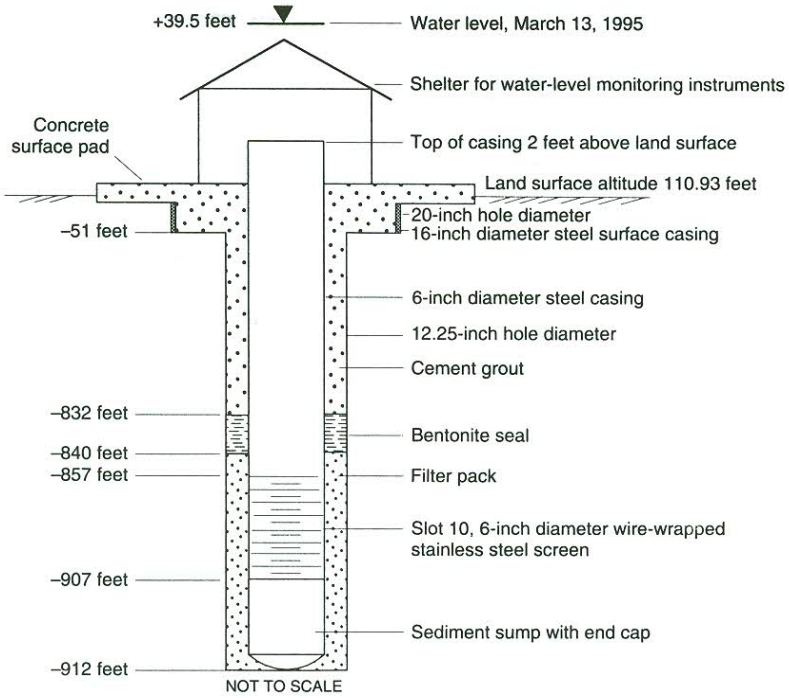

Figure 5. Schematic diagram of Millhaven test well TW-4. Footages are distances above (+) or below (–) land surface.

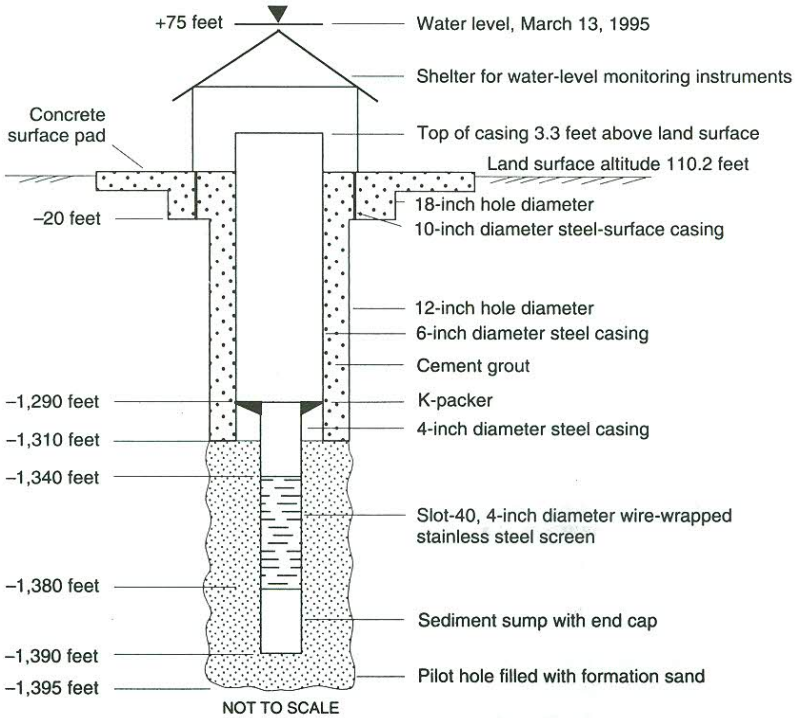

Figure 6. Schematic diagram of Milllhaven test well TW-5. Footages are distances above (+) or (–) below land surface.

Figure 7. Photograph showing subsidence during drilling of Millhaven TW-1. Photograph courtesty of David C. Leeth, U.S. Geological Survey.

During drilling, cavernous limestone was encountered at a depth of 51 ft and 16-in. diameter steel surface casing was installed to that depth to prevent caving of loose sands above the limestone.

TW-5 was completed in September 1994 using 6-in. diameter steel casing and telescoped 4-in. diameter steel casing and stainless-steel screen line. The 6-in. diameter steel casing was installed to a depth of 1,310 ft and pressure grouted in place. The 4-in. diameter casing and screen line was telescoped from a depth of 1,290 ft using a neoprene slip-packer. The completed well is screened from 1,340-1,380 ft.

GEOLOGIC DATA

Coastal Plain sediments underlying Screven County range in age from Late Cretaceous to Holocene. A generalized correlation of units of Late Cretaceous through Eocene age, in the southeastern United States is shown in figure 8. These sediments unconformably overlie igneous and metamorphic rocks of Paleozoic age and consolidated red beds of early Mesozoic age (Chowns and Williams, 1983).

Lithology

Coastal Plain sediments at the Millhaven site consist of sand, silt, clay, and limestone. Lithologic and geophysical characteristics of sediments at the Millhaven site are shown graphically on plate 1. A detailed description of the lithology, grain size, sorting, induration, texture, amount and composition of matrix, physical and biogenic sedimentary structure, and minor mineral components of core collected at the Millhaven site is shown in the appendix. Textural classification of siliciclastic sediments was adapted from a standard grain-size scale (Wentworth, 1922) and includes: clay (less than 0.020 millimeters (mm)), silt (0.020-0.065 mm), sand (0.065-2.00 mm), granules (2.00-4.00 mm), and pebbles (4-64 mm). Sand-size grains are further subdivided into five classes: very fine (0.065-0.125 mm), fine (0.125-0.250 mm), medium (0.250-0.500 mm), coarse (0.500-1.000 mm), and very coarse (1.000-2.000 mm). Grain-size distribution/sorting of siliciclastic-framework grains was based on visual classification of sand grains, granules, and pebbles. In this report, granules and pebbles are considered to be grain-size classes in estimates of sorting.

Categories of sorting were based on the number of grain-size classes observed in a sediment sample and include: well (one grain-size class), moderately (two grain-size classes), poorly (three or four grain-size classes), and very poorly (five or more grain-size classes). The size of heavy minerals, mica grains, clasts, lignite, and carbonate grains, and the abundance of matrix were not considered in sorting estimates.

Categories of induration for siliciclastic sediment depend on the amount of matrix and cement. Samples from the Millhaven core were categorized as: loose (grains are not bound by cement or clay matrix); clay-bound (framework grains are bound in a soft clay matrix); and friable (framework grains are bound in a hardened clay matrix and cement).

The textural classification of carbonates was based on the distribution and abundance of carbonate matrix and grains (Dunham, 1962). A mudstone includes less than 10-percent carbonate grains in a matrix-supported texture. A wackestone includes greater than 10-percent carbonate grains in a matrix-supported texture. A packstone has a grain-supported texture with carbonate matrix between the grains. A grainstone consists of carbonate grains without a matrix. Carbonates in core from the Millhaven site are dominantly composed of calcite with some aragonite. Carbonates are described as either loose, partially lithified, or lithified.

The Geological Society of America (GSA) Rock Color Chart (Geological Society of America, 1991) was used to identify the color of siliciclastic and carbonate sediments. Dominant color or colors for an interval are given with a GSA color code.

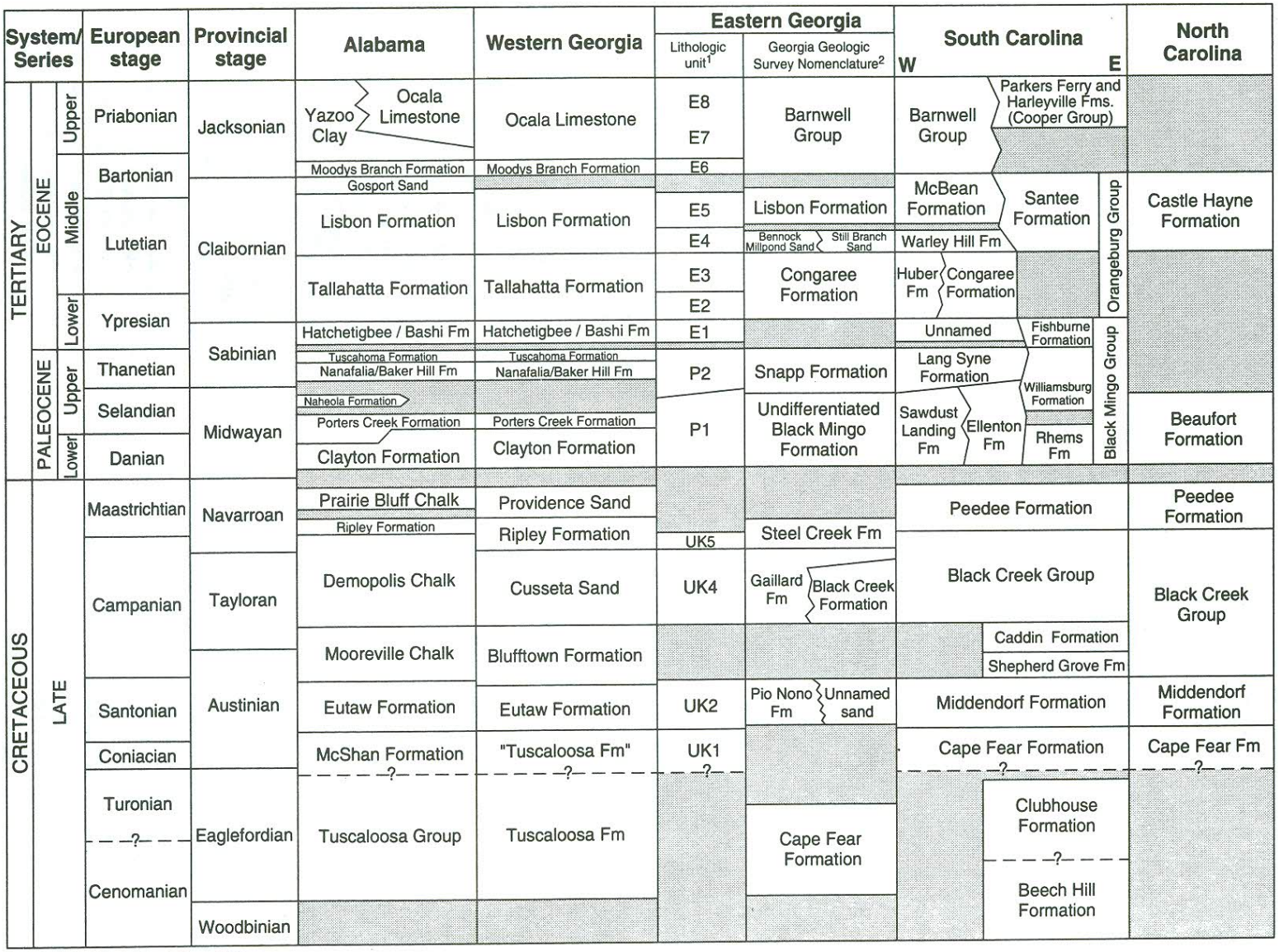

[1] Modified from Prowell and others, 1985
[2] From Huddlestun and Summerour, 1995

Figure 8. Generalized correlation of units of Late Cretaceous through Eocene age in the southeastern United States. Gray areas indicate missing stratigraphic interval. Abbreviation used: Fm, formation. Modified from Clarke and others, 1994.

Micropaleontology

Paleontologic data provided geologic ages, and paleontologic and lithologic data provided interpretations of environments of deposition for several geologic units at the Millhaven site. Ninety core samples were examined for the presence of dinocysts, pollen, benthic and planktonic foraminifers, calcareous nannofossils, and ostracodes; and most of the 90 samples yielded age-diagnostic assemblages for one or more of these fossil groups. Selected sampled intervals are shown on plate 1 as small triangles adjacent to the lithologic column. In this report, pollen zones are designated by Roman numerals and correspond to those originally described by Doyle (1969) and Sirkin (1974), and updated by Doyle and Robbins (1977). Calcareous nonnofossil zones cited in this report correspond to those described by Martini (1971) and are designated by "NP" followed by a numeral.

Core samples were examined for pollen, dinocysts, calcareous nannofossils, and ostracodes between the depths of 1,331.2 and 681 ft. Most samples contain fossils of Late Cretaceous age; however, some samples were barren.

Palynomorphs from the sample at 1,212 ft include *Complexiopollis* sp. D of Christopher (1979a) and *Nyssapollenites sp.* of Christopher (1982a) which are indicative of a Santonian or possibly latest Coniacian age (pollen zone V or possibly a transitional assemblage between zones IV and V). The sample at 1,124.5 ft contains Santonian pollen (zone V); angiosperm pollen includes *Holkopollenites* spp., *Labrapollis* sp. B of Christopher (1979a), and *Momipites* sp. I of Christopher (1979a). This sample also contains sparse dinocysts *Palaeohystrichophora infusorioides* and other peridiniacean forms, suggesting a marginal marine or very nearshore marine environment.

Microfossils from samples between the depths of 1,077 and 968 ft, indicate a late Campanian age and a marine environment of deposition. Dinocysts are abundant and diverse in this interval, and the sample at 1,029.5 ft contains *Palaeohystrichophora infusorioides*, *Xenascus ceratioides*, and *Dinogymnium* spp. Pollen from the 1,029.5 ft sample also indicate a Campanian age. Coccolith floras in samples at 1,077, 1,021.5, 971, and 968 ft belong to late Campanian Zone CC22. The most common species are dissolution resistant *Micula decussata* and *Reinhardtites anthophorus*. Other stratigraphic guide species such as *Broinsonia parca*, *Calculites obscurus*, *Ceratolithoides aculeus*, *Quadrum trifidum*, and *Reinhardtites levis*, are present in smaller numbers. Samples at 1,043.3, 1,021.4, and 1,015.5 ft contain ostracode assemblages of moderate diversity. It is possible that some type of environmental restriction, such as reduced salinity or low oxygen, affected the diversity of ostracode faunas. Stratigraphically, the most important ostracode species in samples between 1,043.3 and 1015.5 ft are *Haplocytheridea sarectaensis*, *Escharacytheridea pinochii*, and *Eocytheropteron straillis,* which suggest correlation with the Donoho Creek Formation in the Carolinas.

Samples at 922 and 914.2 ft contain abundant and diverse dinocysts. The sample at 914.2 ft includes *Cribroperidinium* sp., *Andalusiella* n. sp., *Palaeohystrichophora infusorioides,* and *Xenascus* spp. Dinocysts are present but not abundant in the samples at 830.5 and 755 ft. Samples at 768 and 733.3 ft contain Cretaceous-age and long-ranging forms of pollen. Samples from 849 to 824.4 ft are probably Maastrichtian in age based on the occurrence of the pollen species *Proteacidites* sp. G of Christopher (1980), *Casuarinidites* sp. A of Frederiksen and Christopher (1978), and *Momipites tenuipolus*.

Twelve samples examined between the depths of 636.8 and 581 ft indicate sediments in this interval are of Paleocene age. In the Paleocene section, samples were examined for pollen, dinocysts, calcareous nannofossils, benthic and planktonic foraminifers, and ostracodes.

All fossil groups examined in the Paleocene section suggest correlation with the Naheola Formation of the Gulf Coast and(or) the Aquia Formation of Virginia. These formations are of Selandian age and fall within the early part of the late Paleocene (Midwayan Gulf Coast provincial stage). It is possible that the deepest sample (636.8 ft) could be slightly older than the early part of the late Paleocene. The earliest part of Paleocene time is represented only by reworked microfossils characteristic of outer neritic environments.

The lowest dinocyst sample in the Paleocene section (632.1 ft) contains *Palaeoperidinium pyrophorum* and *Andalousiella* sp. aff. *A. polymorpha* of Edwards (1980). The sample at 589 ft contains *Fibradinium annetorpense*, *Deflandrea* cf. *D. dartmooria* of Edwards and others (1984), and *Phelodinium* sp. of Edwards (1989). The species in the 589-ft sample suggest correlation with the lower parts of the Aquia Formation in Virginia.

Pollen from three samples (589, 581, and 571 ft) indicate a late Midwayan age. Specimens of the *Caryapollenites prodromus* group (lowest observed occurrence in the Naheola Formation of the Gulf Coast), together with *Momipites actinus* (restricted to the uppermost Porters Creek Formation and the Naheola), occur in the highest sample (571 ft). Other important species in the Paleocene section include *Nudopollis thiergartii*, *Plicatopollis triradiatus*, and *Momipites dilatus*. The sample at 589 ft contains *Choanopollenites* sp. cf. *C. consanguineus*, previously known only from the lowest part of the Aquia Formation in Virginia.

With the exception of the samples at 577 and 571 ft, all of the Paleocene samples were studied for calcareous nannofossils. The lowest sample at 636.8 ft contains only rare specimens of *Thoracosphaera* spp. and cannot be dated accurately using calcareous nannofossils, but appears to be of Paleocene age. The remaining samples from 631.3 to 581 ft are placed within the lower part of zone NP 5 (late Paleocene) by the presence of *Chiasmolithus bidens* and the absence of *Heliolithus cantabriae* and *Heliolithus kleinpellii*. The stratigraphically important species *Fasciculithus tympaniformis* is sparse in the Millhaven core and could not be used reliably to evaluate Paleocene biostratigraphy.

Planktonic foraminiferers in the sample at 631.3 ft are abundant and include early Paleocene age—*Globoconusa daubjergensis* and *Morozovella pseudobulloides*. These foraminifers suggest a deeper neritic environment of deposition and are apparently reworked into the upper Paleocene sediments.

Samples examined between the depths of 565 and 499 ft were undatable on the basis of paleontologic evidence. A single sample at 565 to 564 ft produced rare small peridiniacean dinocysts that indicate part of the unit was deposited under some marine influence.

Samples examined at depths less than 499 ft indicate an Eocene age. Samples in the Eocene section were examined for dinocysts, pollen, calcareous nannofossils, foraminifera, and ostracodes.

Samples between the depths of 499 and 375 ft correlate with the lower Claibornian stage and with calcareous nannofossil zones NP 14, NP 15, and possibly NP 16. Sediments in this interval are marine in origin, and the foraminiferal assemblages suggest warm, shallow waters of less than 100 ft depth.

Dinocysts in the lower Claibornian interval fall into four assemblages. The lowest assemblage (498.5, 495.5, 490, 473.5, and 466 ft) contains *Pentadinium favatum*, *Tubiosphaera* cf. *galatea*, and *Wetzeliella* sp. and appears to correlate with the Tallahatta Formation in Alabama. The next higher assemblage (466 ft) contains *Pentadinium favatum*, *Wetzeliella* sp., and several undescribed forms, but lacks *Tubiosphaera* cf. *galatea* and appears to correlate with the lowest Lisbon Formation in Alabama. The next higher assemblage (442 and 413 ft) contains *P. favatum* and *P. goniferum*. The highest assemblage (375 ft) contains *P. goniferum* above the highest occurrence of *P. favatum*. The two upper assemblages appear to be correlative with the lower and(or) middle parts of the Lisbon Formation in Alabama.

The only pollen studied in the lower Claibornian interval was in the 490-ft sample. In this sample, sparse pollen grains were recovered; among these were long ranging forms *Platycarya platycaryoides* and *Momipites-Plicatopollis-Platycaryapollenites* complex. The *Momipites-Plicatopollis-Platycaryapollenites* complex is not known to range below the Eocene.

Samples at 495.5, 481.5, and 473.5 ft are placed within the early and middle Eocene calcareous nannofossil zone NP 14 by the presence of *Discoaster sublodoensis* and the absence of the genus *Nannotetrina*. *Discoaster saipanensis*, *Lanternithus minutus*, *Lithostromation perdurum*, and *Lithostromation simplex* also are present. The sample at 465.5 ft contains no diagnostic species and could belong to either zone NP 14 or NP 15. Samples at 420.5, 413, and 404 ft are placed in zone NP 15 because of the presence of *Chiasmolithus gigas* and because large specimens of *Reticulofenestra umbilica* are not present in this interval. The sample at 375 ft is barren of calcareous nannofossils.

The sample at 404 ft contains a foraminiferal assemblage dominated by *Cibicides*, *Gyrodinoides*, *Valvulineria*, *Asterigerina*, *Eponides*, and *Textularia*. The fossil assemblage indicates deposition in warm waters of less than 100 ft depth. The presence of *C. westi* suggests correlation with the Lisbon or Gosport Formations in Alabama.

Samples examined between the depths of 368 and 313.5 ft indicate sediments in this interval are of late middle Eocene age and correlate with the upper part of the Lisbon Formation in Alabama and with the Santee Formation in coastal South Carolina. Sediments in this interval are marine in origin with water depths in the 100 to 200 ft range.

Dinocysts in the 346-ft and 313.5-ft samples include *Pentadinium goniferum* and *P. polypodum*. The 313.5-ft sample includes *Rhombodinium draco* and *Areosphaeridium diktyoplokus*.

The calcareous nannofossil sample from 368 ft is placed within middle Eocene zone NP 16 because of the presence of *Reticulofenestra umbilica*, *Cribrocentrum reticulatum*, and *Chiasmolithus bidens*. Benthic foraminifers in samples at 365, 355, and 346 ft indicate deposition at water depths between 100 and 200 ft. The presence of *Cibicides westi* suggests a Lisbon or Gosport equivalency.

Samples at 365, 355, and 346 ft contain middle to late Eocene ostracodes, including *Haplocytheridea montgomeryensis* (small form only) and *Opimocythere* cf. *O. martini*. Ostracodes from 307 and 248 ft were nondiagnostic.

Fossil groups studied from samples shallower than 307 ft indicate a middle or late Eocene age, and are placed within calcareous nannofossil zones NP 17-21. Foraminifers suggest shallow marine environments in the deeper part of the 0-100 ft depth range.

Dinocyst samples between 227.5 and 205 ft contain *Pentadinium laticinctum laticinctum*, *Charlesdowniea* cf. *C. variabilis*, and *Phthanoperidinium comatum*. Samples at 210 and 205 ft contained *Cordosphaeridium funiculatum* and the sample at 205 contained late Eocene markers *Batiacasphaera baculata* and *B. compta*. An undescribed form of *Tuberculodinium* at 210 ft suggests placement very near the Eocene-Oligocene boundary.

The sample at 210 ft had pollen species such as *Momipites coryloides*, *Pseudolaesopollis ventosus*, and *Tetracolporopollenites lesquereuxianus*. These species are typical indicators of Eocene age.

Calcareous nannofossil samples from 365 to 227.5 ft are placed questionably within the middle Eocene zone NP 17, but could possibly be late Eocene. Samples in this interval are above the highest occurrence of *Chiasmolithus bidens* and lack species indicative of zone NP 18 or higher. Samples between 223.8 and 176 are probably zone NP 17 or NP 18, but could be as young as zones NP 19/20 to NP 21.

Four samples from the interval 168.5 to 131 ft were either barren of calcareous nannofossils or contained rare specimens of nondiagnostic species. The precise placement of this interval within the Eocene cannot be determined from calcareous nannofossils.

Calcareous nannofossils at 118, 105, 103.5, and 95 ft are tentatively placed in late Eocene zones NP 19/20 to NP 21. All four samples contain *Ismolithus recurvus* and *Cyclococcolithus formosus*, and lack *Discoaster barbadiensis*, *Discoaster saipanensis*, and *Cribrocentrum reticulatum*. The sample at 118 ft did not contain age diagnostic foraminiferal taxa. However, the foraminiferal assemblage suggests shallow marine environments at the deeper part of 0-100 ft depth range.

HYDROLOGIC DATA

Aquifer-property and ground-water-level data were collected and analyzed to characterize the water-bearing properties and hydrologic characterics of Coastal Plain sediments at the Millhaven site. Hydrologic data collected at the Millhaven site are presented for 1992-95. Aquifer-property data include core analyses, resistivity estimates, and aquifer tests. Ground-water levels were collected on a continuous basis from each test well upon completion of construction and development.

Hydrogeologic Units

Water-bearing units at the Millhaven site were related to previously-named hydrogeologic units by comparing core and geophysical data collected at the site to interpreted borehole data from nearby sites reported by Miller (1986), Clarke and others (1985), Brooks and others (1985), and Aadland and others (1992). This comparison indicates several hydrogeologic units described in the literature are present at the Millhaven site. They are, in order of descending depth, (1) Floridan aquifer system (Miller, 1986) comprised of limestone and calcareous sand of Eocene age; (2) Dublin aquifer system (Clarke and others, 1985), comprised of sand of Paleocene and Late Cretaceous age; and (3) Midville aquifer system (Clarke and others, 1985) comprised of sand of Late Cretaceous age. A generalized correlation of hydrogeologic units in the study area is shown on figure 9.

The Floridan aquifer system is comprised of the largely carbonate Upper and Lower Floridan aquifers (Miller, 1986). In updip areas, terrigenous sediments of Eocene age are hydraulically connected to the Upper and Lower Floridan aquifers. To account for this connection, Krause and Randolph (1989) included these updip equivalents in their simulation of ground-water flow in the Floridan aquifer system. Updip equivalents to the Upper Floridan aquifer have been referred to in the study area as the Jacksonian aquifer (Vincent, 1982) and the Upper Three Runs aquifer (Aadland and others, 1992; Summerour and others, 1994). Updip equivalents to the Lower Floridan aquifer have been referred to as the Gordon aquifer system (Brooks and others, 1985) and the Gordon aquifer (Aadland and others, 1992; Summerour and others, 1994).

At the Millhaven site, the upper part of the Floridan aquifer system is largely carbonate and is within the areal extent of the Upper Floridan aquifer originally defined by Miller (1986). For this reason, the upper part of the Floridan aquifer system at the Millhaven site is herein referred to as the Upper Floridan aquifer. The Upper Floridan aquifer at Millhaven consists of three permeable zones—TW-1 was screened in the upper zone which consists of a sandy limestone, TW-2 was screened in the middle zone which consists of calcareous sand, and TW-3 was completed as an open hole in dense limestone of the lower zone. Test wells were not completed in the Gordon aquifer at the Millhaven site.

The Dublin aquifer system in east-central Georgia originally was defined by Clarke and others (1985) as comprised of sediments of Paleocene and Late Cretaceous age. Near the Savannah River, Clarke and others (1985) described local confining units that divided the system into an upper aquifer of Paleocene-age sediments and a lower aquifer of Cretaceous-age sediments. In South Carolina, Aadland and others (1992) redefined the Dublin to consist of Cretaceous-age sediments of the Crouch Branch aquifer and overlying Paleocene sediments as the Crouch Branch confining unit of the Meyers Branch confining system.

The Dublin aquifer system in this study is divided into three aquifers and confining units that are informally named the Millers Pond, upper Dublin, and lower Dublin aquifers and confining units (plate 1, fig. 9). At the Millhaven site, TW-4 was screened in the lower Dublin aquifer. The Millhaven corehole was

GEOLOGIC SERIES	HYDROLOGIC UNITS		
	Georgia	This study	South Carolina[1]
EOCENE	Jacksonian aquifer[2]/ Upper Floridan aquifer[3]	Upper Three Runs aquifer/ Upper Floridan aquifer	Upper Three Runs aquifer
	Confining unit	Gordon confining unit	Gordon confining unit
	Gordon aquifer system[4]	Gordon aquifer	Gordon aquifer
PALEOCENE	Confining unit	Millers Pond confining unit	Crouch Branch confining unit
LATE CRETACEOUS	Dublin aquifer system[5]	Millers Pond aquifer	
		Upper Dublin confining unit	
		Upper Dublin aquifer	Crouch Branch aquifer
		Lower Dublin confining unit	
		Lower Dublin aquifer	
	Confining unit	Upper Midville confining unit	Mcqueen Branch confining unit
	Midville aquifer system[5]	Upper Midville aquifer	Mcqueen Branch aquifer
		Lower Midville confining unit	
		Lower Midville aquifer	
	Confining unit	Basal confining unit	Appleton confining system

[1] Aadland and others, 1992
[2] Vincent, 1982
[3] Miller, 1986
[4] Brooks and others, 1985
[5] Clarke and others, 1985

Figure 9. Hydrogeologic units in the vicinity of the Millhaven site.

cased to a depth of 577 ft and left as an open hole to a depth of 611 ft in the confining unit beneath the Millers Pond aquifer (upper Dublin confining unit); test wells were not completed in the Millers Pond or upper Dublin aquifers at the Millhaven site.

The Midville aquifer system of Clarke and others (1985) is herein divided into the upper and lower Midville aquifers (plate 1, fig. 9). TW-5 was screened in the lower Midville aquifer; test wells were not completed in the upper Midville aquifer at the Millhaven site.

Each confining unit is named for the aquifer underlying it. For example, the upper Dublin aquifer is overlain by the upper Dublin confining unit, the lower Dublin aquifer is overlain by the lower Dublin confining unit, and so forth.

Hydraulic Properties

At the Millhaven site, selected core samples were analyzed to determine vertical hydraulic conductivity and porosity. Aquifer tests were conducted by students and staff from Clemson University in each of the five test wells at the site to determine transmissivity, horizontal hydraulic conductivity, and to detect any interaquifer leakage induced during test pumping. Horizontal hydraulic conductivity was also estimated from borehole formation resistivity logs using a method described by Faye and Smith (1994).

Hydraulic Conductivity of Core Samples

Selected core samples of low-permeability layers were tested by Core Laboratories, Inc., New Orleans, La., to determine the vertical hydraulic conductivity and porosity (table 2, plate 1). Values of vertical hydraulic conductivity were determined by conducting tests using a flexible-wall permeameter, following American Society for Testing and Materials (ASTM) standard D-5084-90 (American Society for Testing and Materials, 1990). Porosity was determined using procedures described in ASTM standard D-2216-80 (American Society for Testing and Materials, 1980).

Samples 1-5 were collected from layers of clay between depths of 591 and 647 ft that compose the upper Dublin confining unit. Values of vertical hydraulic conductivity for samples 1-3 ranged from 1.15×10^{-5} to 4.61×10^{-4} ft/d, which are within expected ranges for clay (Heath, 1983, p. 13). Similarly, measured porosity for samples 1-3 range from 47.8 to 55.3 percent, which are within expected ranges for clay (Freeze and Cherry, 1979, p. 37). Samples 4 and 5, however, have relatively high conductivities (1.19×10^{-1} ft/d and 5.29×10^{-2} ft/d, respectively) and relatively low porosities (34.7 and 38 percent, respectively). High conductivity values and low porosity values for samples 4 and 5 may be due to a higher percentage of sand in those intervals.

Samples 6-9 were collected from clay layers and fine-grained clayey sand between depths of 944 and 1,089 ft that compose the upper Midville confining unit. A hydraulic-conductivity value was not measured from sample 6 because the sample was of such low permeability that it was not possible to establish a positive flow through the permeameter. However, Core Laboratories, Inc., estimate that the hydraulic conductivity of sample 6 is less than 2.83×10^{-6} ft/d. Values of vertical hydraulic conductivity for samples 7-9 range from 1.13×10^{-4} to 1.4×10^{-3} ft/d, which are within expected ranges for clay (Heath, 1983, p. 13). Porosity values for samples 6, 7, and 9 range from 36 to 58.2

Table 2. Hydraulic properties of selected core samples from the Millhaven site
[Analyses by Core Laboratories, Inc., New Orleans, La.; <, less than; Hydrogeologic unit: UDc, upper Dublin confining unit; UMc, upper Midville confining unit]

Sample number	Sample interval below land surface (feet)	Hydrogeologic unit	Vertical hydraulic conductivity (feet per day)	Porosity (percent)	Lithology
1	591	UDc	1.27×10^{-4}	47.8	clay, greenish black, laminated, silty, fossilifierous
2	597	UDc	1.15×10^{-5}	51.2	clay, dark greenish gray, laminated, dense, fossilifierous
3	615	UDc	4.61×10^{-4}	55.3	clay, olive black, laminated
4	631	UDc	1.19×10^{-1}	38.0	clay, dark gray, sandy, fossiliferous, glauconitic
5	647	UDc	5.29×10^{-2}	34.7	clay, dark greenish gray, sandy
6	944	UMc	$<2.83 \times 10^{-6}$ (estimated)	58.2	clay, olive black, dense, thin silt laminations, slightly micaceous
7	1,024.5	UMc	1.02×10^{-3}	36.0	clay, olive black, laminated, burrowed, sandy, micaceous
8	1,044	UMc	1.13×10^{-4}	29.6	clay, dark gray, sandy, laminated, burrowed, fossiliferous
9	1,089	UMc	1.4×10^{-3}	38.1	sand, olive gray, very fine to fine, clayey, micaceous

percent, which are within expected ranges for clay and sandy clay (Freeze and Cherry, 1979, p. 37). A porosity of 29.6 percent for sample 8 is lower than would be expected for a clay, and may be due to a higher percentage of sand in the interval.

Aquifer Tests

Aquifer tests were conducted and analyzed in each of the five test wells at the Millhaven site during October-December 1994 (Kidd and Hodges, 1994a, b, c, and d). Transmissivity was determined using the Jacob straight-line method (Cooper and Jacob, 1946). Well efficiency was determined by dividing the theoretical drawdown after 24 hours of pumping to the actual drawdown after the same amount of time. Barometric efficiency (BE) was determined for each well by calculating the ratio of the change in hydraulic head in the well (due to atmospheric changes) to the actual change in atmospheric pressure. A BE of 1 indicates that 100 percent of the atmospheric pressure changes have been transmitted to the aquifer; whereas, a BE of 0 (zero) indicates none of the atmospheric pressure changes have been transmitted to the aquifer. Prior to computation of hydraulic properties, water-level readings were corrected for barometric fluctuations by subtracting atmospheric pressure changes multiplied by the BE. A summary of aquifer-test results at the Millhaven site is provided in table 3.

Analyses for TW-5, completed in the lower part of the Midville aquifer system, are not presented because unfavorable test conditions complicated evaluation of drawdown data. Problems during testing of TW-5 included excessive drawdowns, variable flow rates, and well development during testing. These problems are related to the small grain size and high clay and mica content of aquifer sediments, and to the small slot size of the screen utilized in the well.

Computed well-efficiency values in the Millhaven test wells ranged from 31.5 to 97 percent, but are probably lower in TW-5 for which an efficiency could not be calculated. The greatest efficiency was in TW-3, completed as an open hole in limestone. The relatively low well efficiencies in the other wells suggests that hydraulic properties estimated by the aquifer tests are probably lower than actual values.

The Upper Floridan is the most productive aquifer at the Millhaven site, as indicated by the highest well yields, values of specific capacity, transmissivity, and hydraulic conductivity. The middle zone screened in TW-2, is the most productive at the Millhaven site with a test yield of 27 gal/min, a specific capacity of 9.97 gal/min/ft, a transmissivity of 5,580 ft^2/d, and a horizontal hydraulic conductivity of 70 ft/d.

Table 3. Aquifer-test analyses at the Millhaven site, October-December, 1994
[Analysis by Clemson University (Kidd and Hodges, 1994a, b, c, d); Water-bearing unit: UF, Upper Floridan aquifer; LD, lower Dublin aquifer; LM, lower Midville aquifer; --, no data]

Well numbers	Water-bearing unit	Aquifer test date	Pumping period (number of hours)	Average pumping rate (gallons per minute)	Maximum drawdown (feet)	Specific capacity[1/] (gallons per miniute per foot)	Well efficiency (percent)	Barometric efficiency (percent)	Transmissivity (feet squared per day)	Horizontal hydraulic conductivity (feet per day)
TW-1 (33X051)	UF	10/03/94 to 10/10/94	66	53	25.6	2.12	31.5	75	1,860	27
TW-2 (33X052)	UF	11/11/94 to 11/15/94	37	217	22.2	9.97	59	55	5,580	70
TW-3 (33X053)	UF	11/03/94 to 11/11/94	72.6	207.5	52.19	4.14	97	35	1,302	13
TW-4 (33X054)	LD	11/30/94 to 12/38/94	72	76	67.96	1.14	31	40	1,116	10
TW-5 (33X055)	LM	12/08/94 to 12/12/94	53.2	15	158.1	0.01	--	50	--	--

[1/] After 24-hours pumping.

Hydraulic Conductivity Estimated from Borehole Resistivity

Horizontal hydraulic conductivity in several water-bearing zones at the Millhaven site was estimated by applying logarithmic regression models developed by Faye and Smith (1994) to borehole resistivity data. Faye and Smith (1994) developed regression models describing the relationship between hydraulic conductivity (as determined by aquifer tests) to aquifer bulk resistivity (as determined from borehole geophysical logs) for clastic aquifers. Using data from boreholes throughout the Coastal Plain of the southeastern United States, Faye and Smith (1994) developed regression models based on the age of sediments that comprise aquifers:

Late Cretaceous

$$K_h = 3.2R_o^{0.48} \quad (1)$$

Paleocene and early Eocene

$$K_h = 0.57R_o^{1.0} \quad (2)$$

middle Eocene

$$K_h = 3.8R_o^{0.67} \quad (3)$$

where

K_h is horizontal hydraulic conductivity in ft/d; and

R_o is bulk resistivity in ohm-meters.

At the Millhaven site, bulk resistivity was determined using the long-normal (64-in.) resistivity log (Joan S. Baum, U.S. Department of Energy, written commun., 1995). The mean, minimum, and maximum bulk resistivity for a contributing interval was determined from digital-resistivity data collected from the borehole. For each unit, only permeable sand intervals were included in the estimation of horizontal hydraulic conductivity; clay and silt intervals were excluded from all calculations. Due to problems with borehole caving, the long-normal log was only available for the upper part of the Millhaven corehole (0-900 ft, plate 1). For this reason, estimates were computed for the Gordon, Millers Pond, upper Dublin, and lower Dublin aquifers, but not for the upper and lower Midville aquifers, which occur at depths greater than 900 ft. Hydraulic conductivity estimates were not computed for the Upper Floridan aquifer (late Eocene age) because it is largely carbonate and does not fall into one of the age ranges evaluated by Faye and Smith (1994). Estimated minimum, maximum, and mean horizontal hydraulic conductivity values are listed in table 4.

The mean estimate for the lower Dublin aquifer using the Faye and Smith (1994) method (table 4) was compared to the value determined from aquifer testing in TW-4 (table 3) completed in the lower Dublin aquifer. Estimated mean horizontal hydraulic conductivity computed using the Faye and Smith (1994) method is about 120 percent higher than the value determined from the TW-4 aquifer test. This difference may be explained by the low well efficiency of TW-4 (31 percent) which resulted in an underestimation of hydraulic properties during the aquifer tests.

Table 4. Horizontal hydraulic conductivity estimates determined from formation resistivity logs at the Millhaven site
[Estimated using method developed by Faye and Smith (1994); analysis by Joan S. Baum, U.S. Department of Energy (formerly with U.S. Geological Survey), written commun., 1995]

Water-bearing unit	Lithology	Age of sediments	Interval (feet)	Estimated horizontal hydraulic conductivity[1/] (feet per day)		
				Minimum	Maximum	Mean
Gordon aquifer	calcareous sand, sandy limestone	Middle Eocene	365-505	22.27	69.17	41.96
Millers Pond aquifer	sand, gravel	Paleocene	524-570	5.70	10.83	7.13
Upper Dublin aquifer	sand, some clay	Upper Cretaceous	657-776	11.74	30.68	22.47
Lower Dublin aquifer	sand	Upper Cretaceous	820-934	18.11	27.30	22.03

[1/] Permeable sand intervals only—clay and silt intervals are not included.

Ground-Water Levels

Following well completion and development, water-level recorders were installed in each well to continuously monitor water-level fluctuations and trends in water-bearing units. Water-level data were used to determine the vertical distribution of hydraulic head in the water-bearing units (table 1, plate 1).

Vertical distribution of hydraulic head gives an indication of the potential for vertical ground-water movement and interconnection between adjacent aquifers. Under unstressed conditions, possible vertical head relations include upward gradients in discharge areas, downward gradients in recharge areas and minimal vertical gradient in areas dominated by lateral flow.

Water levels were measured on March 13, 1995, in the five test wells and in the corehole to determine the vertical distribution of head at the Millhaven site (table 1, plate 1). Head measurements in TW-1, TW-2, and TW-3 were from about 8.8 to 11.6 ft below land surface; whereas, measurements in the corehole, TW-4 and TW-5, were from about 12.6 to 75 ft above land surface. Values corrected for altitude differences between wells indicate that there is a general increase in hydraulic head with depth at the Millhaven site, indicative of an area of potential upward discharge.

Hydrographs showing relations between ground-water levels at the Millhaven site, stream stage at the Savannah River near Millhaven (station 02197500) and Brier Creek at Millhaven (station 02198000) gages, and precipitation at the city of Sylvania for December 1993 to August 1995, are shown in figures 10 and 11. Locations of stream gages and precipitation-monitoring stations are shown on figure 1.

Water levels in the Upper Floridan aquifer in TW-1, TW-2, and TW-3 (fig. 10) during 1994 and 1995 were generally highest in the winter months and lowest in the summer months. During 1994 and 1995, the annual water-level fluctuation was about 4.5 ft in TW-1, 4.8-5 ft in TW-2, and 5-8 ft in TW-3. Water levels in the three wells show some response to extreme changes in Savannah River and Brier Creek stages. For example, during December 1993 to March 1994, there was a general rise in ground-water levels that correspond to a general rise in stages both in the Savannah River and Brier Creek. This rise was followed by a general decrease in ground-water levels and stream stage from March to June 1994. A similar response was observed during July 1995, when a rise in ground-water levels corresponded to a rise in stream stage. The water-level response in the Upper Floridan aquifer to precipitation at Sylvania, Ga., about 11 mi southwest of the site, was less pronounced than the response to stream stage.

Water levels in the lower Dublin aquifer in TW-4 (fig. 11) during 1994 declined about 1.8 ft, showing little response to changing precipitation, or Savannah River and Brier Creek stages. In 1995, water levels in TW-4 fluctuated about 0.8 ft, with highest water levels in the early spring and lowest water levels in late spring and summer. Water levels in TW-4 during 1995 showed a more pronounced response to Savannah River and Brier Creek stages. The general decline during 1994 may be related to a general increase in regional ground-water pumping; however, pumping data are not presently available to confirm this. Insufficient data are available to assess water-level fluctuations and trends in the lower Midville aquifer (TW-5).

To further evaluate the influence of stream stage and precipitation on ground-water levels, a statistical comparison using Spearman's rank correlation coefficient (SRCC) (Iman and Conover, 1983) was performed using ground-water-level data from TW-1, TW-2, TW-3, and TW-4; stream-stage data from the Savannah River near Millhaven and Brier Creek near Millhaven gages; and precipitation data from the cities of Waynesboro and Sylvania (table 5). The SRCC

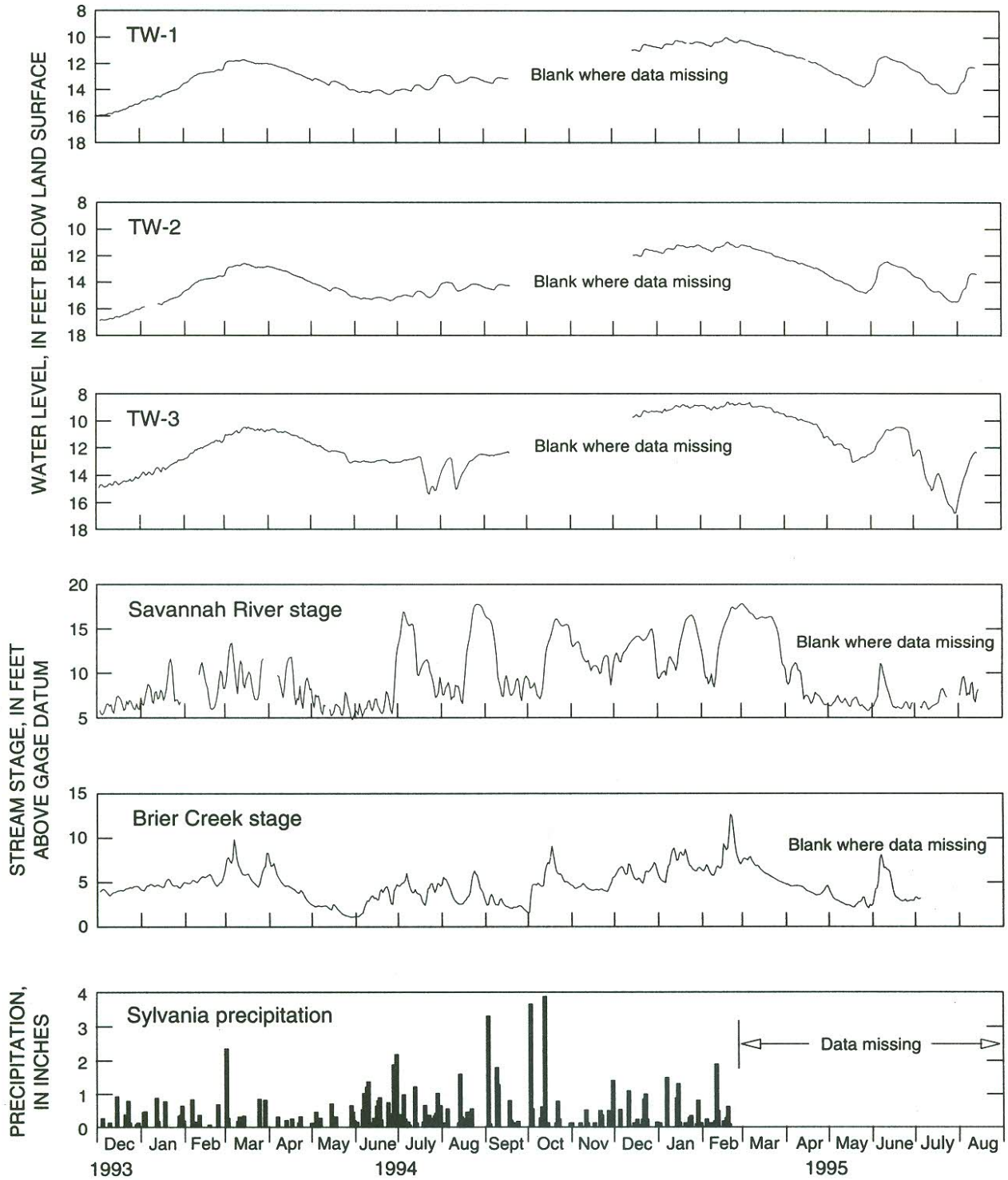

Figure 10. Daily mean ground-water levels in Millhaven test wells TW-1, TW-2, and TW-3; daily mean stream stages at Savannah River near Millhaven (02197500) and Brier Creek near Millhaven (02198000); and precipitation at Sylvania, Georgia, December 1993 to August 1995.

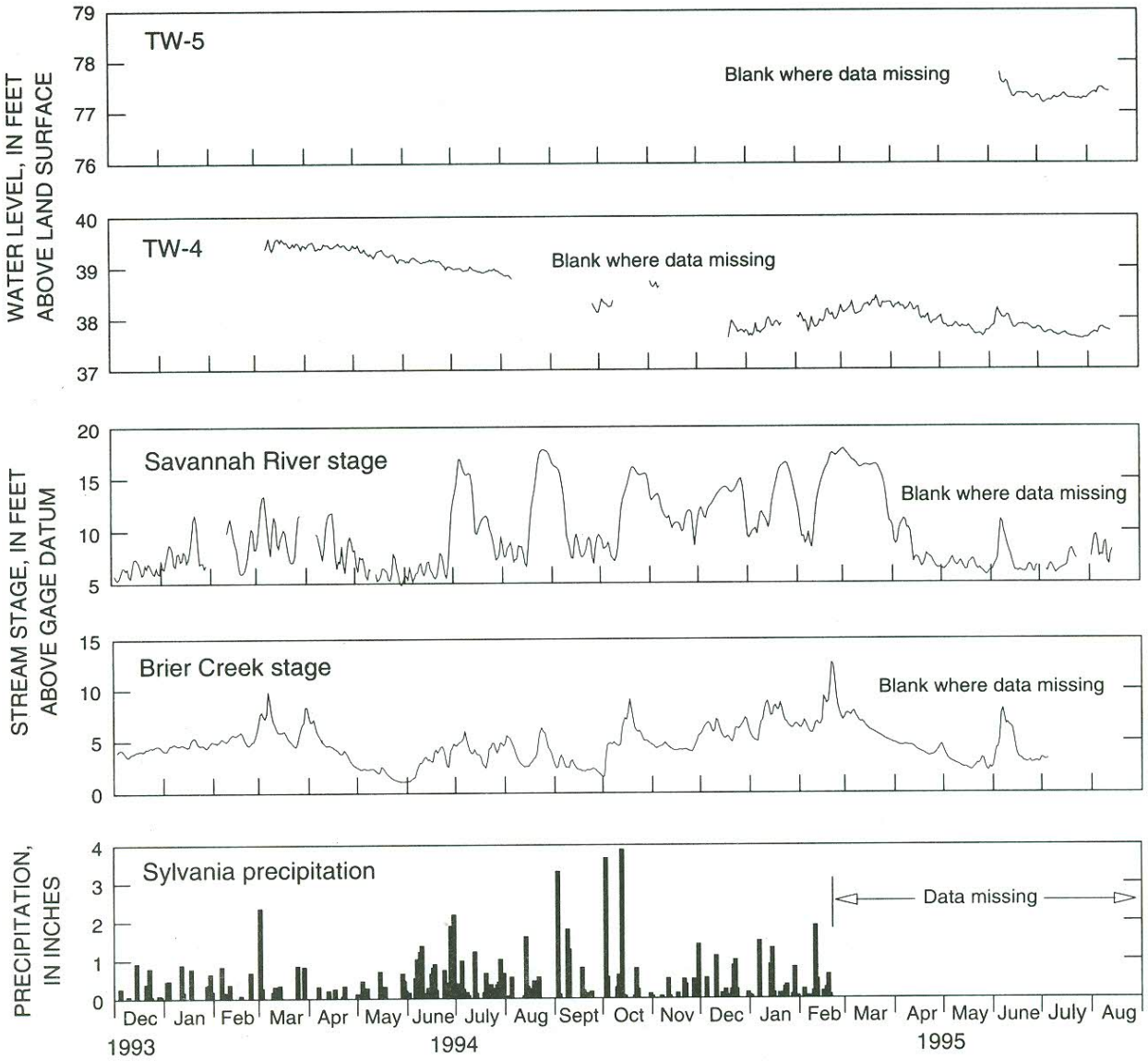

Figure 11. Daily mean ground-water levels in Millhaven test wells TW-4 and TW-5; daily mean stream stages at Savannah River near Millhaven (02197500) and Brier Creek near Millhaven (02198000); and precipitation at Sylvania, Georgia, December 1993 to August 1995.

measures the strength of the monotonic correlation between two variables. If the X and Y variables increase together, there is a positive correlation; however, if the X variable decreases as the Y variable increases, there is a negative correlation. The closer the SRCC is to either +1 (a positive correlation) or -1 (a negative correlation), the stronger the relation between two variables. Ground-water levels in the three zones of the Upper Floridan aquifer (TW-1, TW-2, TW-3) show a good correlation to Savannah River and Brier Creek stages, with Brier Creek showing somewhat higher SRCC values (table 5). Water levels in the three wells show a poor correlation to precipitation at Waynesboro and Sylvania, with the SRCC ranging from -0.074 to -0.118.

Ground-water levels in the lower Dublin aquifer in TW-4 show poor correlation to Savannah River and Brier Creek stages, with the SRCC ranging from -0.117 to +0.014. Water levels in TW-4 also show a poor correlation to precipitation at Sylvania and Millhaven with SRCC of -0.064 and -0.054, respectively.

Although stream stage has some influence on ground-water levels at Millhaven, it is likely that there are other factors affecting ground-water levels in the Millhaven area. Other possible influences on ground-water levels include evapotranspiration in the Upper Floridan aquifer and pumping in the Upper Floridan and lower Dublin aquifers.

Table 5. Statistical comparison of precipitation and stream-stage data to ground-water levels at the Millhaven site
[RHO, Spearman rank correlation coefficient; <, less than]

Factor	Water-bearing unit, test well, and correlation statistics							
	Upper Floridan aquifer						Lower Dublin aquifer	
	TW-1		TW-2		TW-3		TW-4	
	RHO	P-value	RHO	P-value	RHO	P-value	RHO	P-value
Brier Creek stage	0.628	<0.0001	0.645	<0.0001	0.563	<0.0001	-0.117	0.0252
Savannah River stage	.545	<.0001	.554	<.0001	.495	<.0001	.014	.7871
Sylvania precipitation	-.086	.0988	-.105	.0478	-.118	.0238	-.064	.3238
Waynesboro precipitation	-.074	.1581	-.087	.1011	-.087	.0968	-.054	.4052

WATER-QUALITY DATA

Water samples were collected from each test well following development and a subsequent pumping period of at least 24 hours to determine the chemical character of the screened water-bearing zones. Samples were analyzed for dissolved concentrations of inorganic constituents, trace elements, tritium, and for the presence of volatile and semi-volatile organic compounds (table 6). Alkalinity, dissolved oxygen, pH, specific conductance, and water temperature were measured at the wellhead prior to the collection of water samples.

Water sampled from each of the five zones completed at the Millhaven site is low in dissolved solids and, with the exception of high concentrations of iron in one well, is considered to be of good quality. Water from TW-4, completed in the lower Dublin aquifer, contained concentrations of iron that exceeded the U.S. Environmental Protection Agency (EPA) and Georgia Department of Natural Resources, Environmental Protection Division (EPD) secondary maximum contaminant level of 300 µg/L (U.S. Environmental Protection Agency, 1990a; Georgia Department of Natural Resources, Environmental Protection Division, 1993).

Tritium concentrations in samples from the five zones were less than the 100 pCi/L detection limit, and are thus, within the EPA and EPD primary maximum contaminant level of 20,000 pCi/L (U.S. Environmental Protection Agency, 1990a; Georgia Department of Natural Resources, Environmental Protection Division, 1993). Volatile or semi-volatile organic compounds were not detected in any of the test wells at Millhaven.

The vertical distribution of selected water-quality characteristics were plotted (fig. 12) to determine if there are any distinguishing chemical features of the different water-bearing zones at the Millhaven site. In addition, a trilinear plot showing the percentage composition (in milliequivalents per liter) of major cations and anions in water was prepared to determine if any of the water-bearing zones was characterized by a unique water type (fig. 13).

Patterns evident on figure 12 are:

- specific conductance and concentration of dissolved solids, alkalinity as $CaCO_3$, silica, calcium, magnesium, and strontium are highest in the lower zone of the Upper Floridan aquifer (TW-3);
- chloride, potassium, iron, and manganese concentrations are highest in the lower Dublin aquifer (TW-4);
- calcium and total hardness as $CaCO_3$ concentrations are highest in the Upper Floridan aquifer (TW-1, TW-2, and TW-3);
- water in the upper two zones of the Upper Floridan aquifer (TW-1 and TW-2) is oxygenated; whereas, water in the lower zone is not; and
- sodium concentrations are highest in the lower Dublin and lower Midville aquifers (TW-4 and TW-5, respectively).

Table 6. Chemical and physical characteristics of ground water sampled from test wells at the Millhaven site

[Analyses by U.S. Geological Survey, except as noted. Units: mg/L, milligrams per liter; mS/cm, microSiemens per centimeter; mg/L, micrograms per liter; pCi/L, picoCuries per liter. Water-bearing unit: LM, lower Midville aquifer; UFu, Upper Floridan aquifer,upper zone; UFm, Upper Floridan aquifer, middle zone; UFl, Upper Floridan aquifer, lower zone; LD, lower Dublin aquifer; --, no data available; <, less than; E, estimated value]

Property or constituent and units	Test Wells				
	TW-1 (33X051)	TW-2 (33X052)	TW-3 (33X053)	TW-4 (33X054)	TW-5 (33X055)
Screened interval, in feet below land surface	50-80	155-205	225-280	857-907	1,340-1,380
Water-bearing unit	UFu	UFm	UFl	LD	LM
Date sampled[1/]	01/24/95	01/24/95	01/24/95	01/25/95	01/25/95
Physical characteristics and inorganic constituents					
Total hardness as calcium carbonate, mg/L	87	110	130	22	1
Alkalinity, as calcium carbonate, mg/L	92	108	124	92	91
Oxygen, dissolved, mg/L	3.8	5.9	0	0	0
Field pH, standard units	7.7	7.6	7.5	7.4	8.4
Specific conductance, in µS/cm	205	212	269	203	186
Water temperature, ° Celsius	19.7	20.4	20.9	22.2	23.9
Dissolved solids (sum of constituents), mg/L	124	133	178	125	118
Inorganic carbon, dissolved, as carbon dioxide, mg/L	55.5	71.3	92	66.9	53.1
Nitrogen, ammonia, as N, dissolved, mg/L	<0.01	<0.01	0.03	0.19	0.10
Nitrogen, nitrite, as N, dissolved, mg/L	<.01	<.01	<.01	<.01	<.01
Nitrogen, ammonia + organic, as N, dissolved, mg/L	<.20	<.20	<.2	<.20	<.20
Nitrogen, nitrate and nitrite, as N, dissolved, mg/L	.75	.03	.02	0.02	.02
Phosphorus, dissolved, mg/L	<.02	<.02	<.02	.05	.05
Orthophosphate phosphorus, as P, dissolved, mg/L	.03	.01	.01	.04	.07
Calcium, dissolved, mg/L	33	41	46	7.0	.30
Magnesium, dissolved, mg/L	1.1	.90	3.4	1.0	.02
Sodium, dissolved, mg/L	6.7	2.8	3.1	35	43
Potassium, dissolved, mg/L	1.3	1.2	2.3	3.0	.6
Chloride, dissolved, mg/L	3.1	2.6	3.4	3.7	2.0
Sulfate, dissolved, mg/L	5.4	1.6	8.1	8.0	3.3
Fluoride, dissolved, mg/L	.1	.1	.2	.2	.4
Silica, dissolved, mg/L	15	18	37	11	13
Bromide, dissolved, mg/L	.1	.1	.1	.1	.1
Trace elements					
Barium, dissolved, µg/L	34	27	2	109	300
Beryllium, dissolved, µg/L	.8	.8	.9	.9	1
Cadmium, dissolved, µg/L	<1	<1	<1	<1	<1
Chromium, dissolved, µg/L	<5	<5	<5	<5	<5
Cobalt, dissolved, µg/L	<3	<3	<3	<3	<3
Copper, dissolved, µg/L	<10	<10	<10	<10	<10
Iron, dissolved, µg/L	<3	<3	51	500	43
Lead, dissolved, µg/L	<10	<10	<10	<10	<10
Manganese, dissolved, µg/L	<1	<1	<1	26	5
Molybdenum, dissolved, µg/L	<10	<10	<10	<10	<10
Nickel, dissolved, µg/L	<10	<10	<10	<10	<10
Silver, dissolved, µg/L	<1	<1	<1	<1	<1
Strontium, dissolved, µg/L	50	60	240	70	8
Vanadium, dissolved, µg/L	<6	<6	<6	<6	<6

Table 6. Chemical and physical characteristics of ground water sampled from test wells at the Millhaven site—Continued

Property or constituent and units	Test Wells				
	TW-1 (33X051)	TW-2 (33X052)	TW-3 (33X053)	TW-4 (33X054)	TW-5 (33X055)
Zinc, dissolved, µ/g/L	<4	5	<4	5	<4
Aluminum, dissolved, µg/L	<20	<20	<20	<20	<20
Lithium, dissolved, µg/L	<4	<4	<4	<4	<4
			Volatile organic compounds[2/]		
Dichlorobromomethane, total, µg/L	<5	<5	<5	<5	<5
Carbon tetrachloride, total, µg/L	<5	<5	<5	<5	<5
1,2-Dichloroethane, total, µg/L	<5	<5	<5	<5	<5
Bromoform, total, µg/L	<5	<5	<5	<5	<5
Chloroform, total, µg/L	<5	<5	<5	<5	<5
Toluene, total, µg/L	<5	<5	<5	<5	<5
Benzene, total, µg/L	<5	<5	<5	<5	<5
Chlorobenzene, total, µg/L	<5	<5	<5	<5	<5
Chloroethane, total, µg/L	<10	<10	<10	<10	<10
Ethylbenzene, total, µg/L	<5	<5	<5	<5	<5
Methyl bromide, total, µg/L	<10	<10	<10	<10	<10
Methyl chloride, total, µg/L	<10	<10	<10	<10	<10
Methylene chloride, total, µg/L	<5	<5	<5	<5	<5
Tetrachloroethylene, total, µg/L	<5	<5	<5	<5	<5
Trichlorofluoromethane, total, µg/L	<5	<5	<5	<5	<5
1,1-Dichloroethane, total, µg/L	<5	<5	<5	<5	<5
1,1-Dichloroethylene, total, µg/L	<5	<5	<5	<5	<5
1,1,1-Trichloroethane, total, µg/L	<5	<5	<5	<5	<5
1,1,2-Trichloroethane, total, µg/L	<5.	<5	<5	<5	<5
1,1,2,2- Tetrachloroethane, µg/L	<5	<5	<5	<5	<5
1,2-Dichloropropane, total, µg/L	<5	<5	<5	<5	<5
1,2-Transdichloroethylene, total, µg/L	<5	<5	<5	<5	<5
Trans-1,3-Dichloropropene, total, µg/L	<5	<5	<5	<5	<5
Cis-1,3-Dichloropropene, total, µg/L	<5	<5	<5	<5	<5
Vinyl chloride, total, µg/L	<10	<10	<10	<10	<10
Trichloroethylene, total, µg/L	<5	<5	<5	<5	<5
Carbon disulfide, total, µg/L	<5	<5	<5	<5	<5
Vinyl acetate, total, µg/L	<50	<50	<50	<50	<50
2-Hexanone, total, µg/L	<50	<50	<50	<50	<50
Styrene, total, µg/L	<5	<5	<5	<5	<5
1,2-Dibromoethane, total, µg/L	<5	<5	<5	<5	<5
Xylene, µg/L	<5	<5	<5	<5	<5
Acetone, total, µg/L	<100	<100	<100	<100	<100
Methylethyl ketone, total, µg/L	<100	<100	<100	<100	<100
			Tritium[3/]		
Tritium, pCi/L	<100	<100	<100	<100	<100

[1/] Volatile organic carbon samples in TW-1, TW-2, TW-3, and TW-5 and tritium samples from TW-3, TW-4, and TW-5, collected September 6, 1995.

[2/] Analyses by Georgia Department of Natural Resources, Environmental Protection Division.

[3/] Analysis by Georgia Institute of Technology.

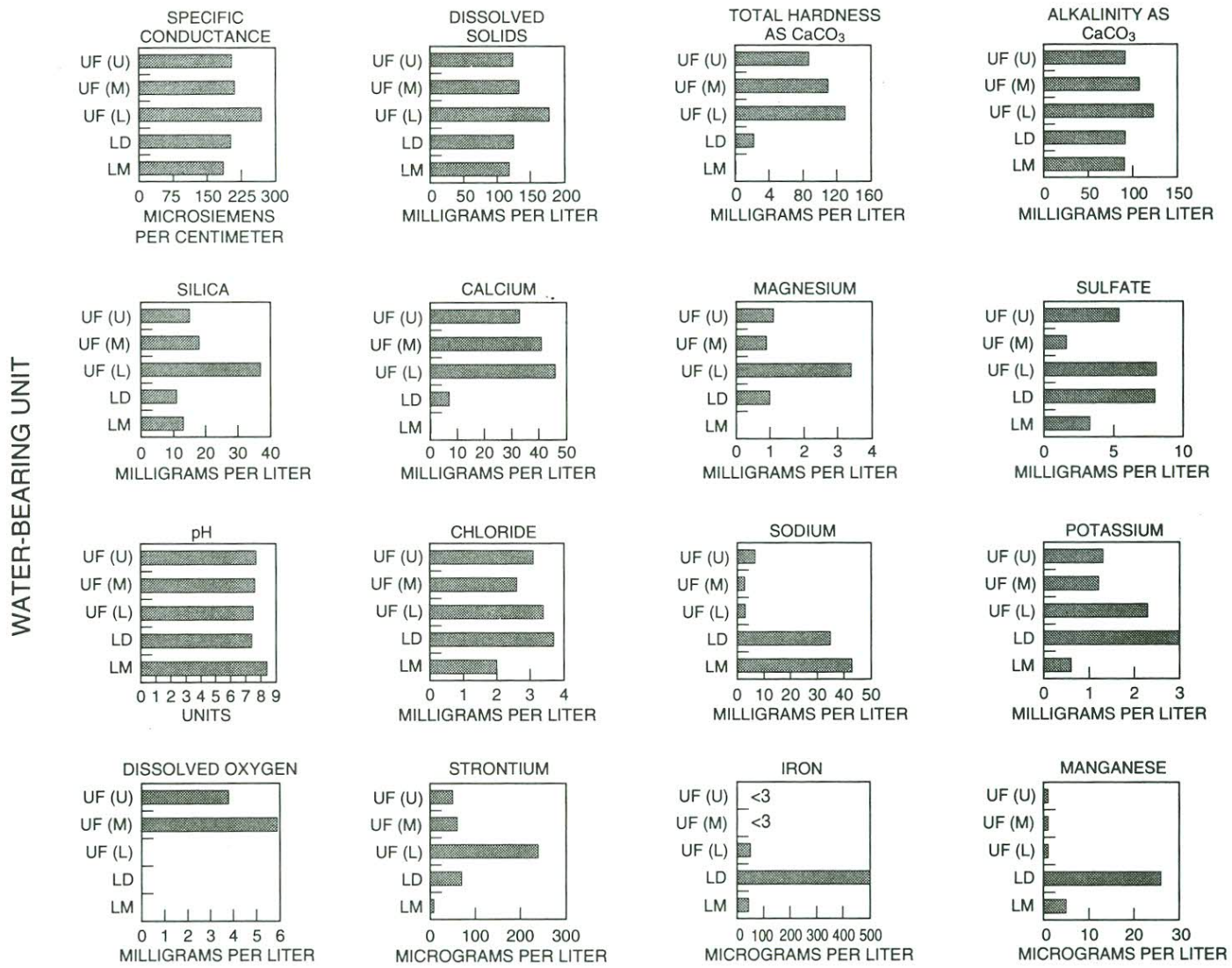

Figure 12. Distribution of selected chemical properties and constituent concentrations by water-bearing unit at the Millhaven site, January 24-25, 1995. Concentrations are reported for dissolved constituents in milligrams per liter or micrograms per liter. Water-bearing unit: UF(U), Upper Floridan aquifer, upper unit; UF(M), Upper Floridan aquifer, middle unit; UF(L), Upper Floridan aquifer, lower unit; LD, lower Dublin aquifer; LM, lower Midville aquifer.

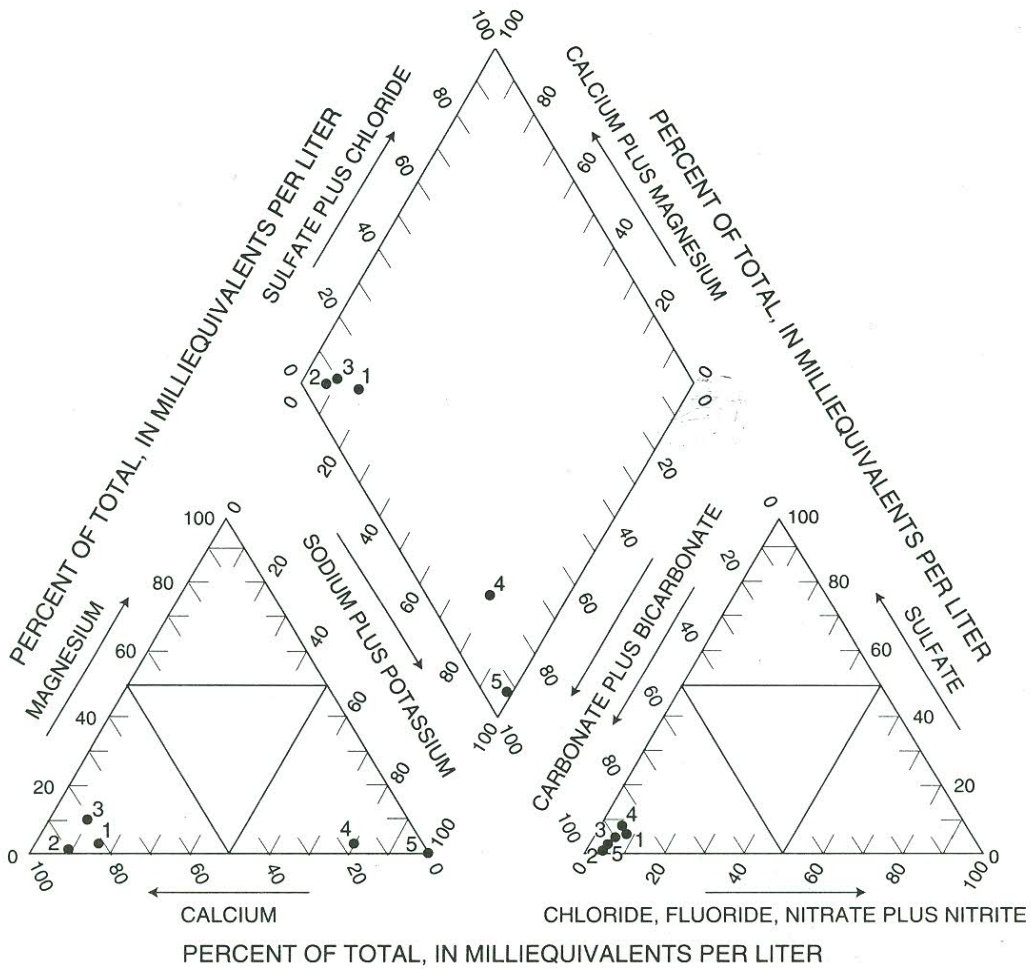

EXPLANATION

•[1] TEST WELL AND IDENTIFICATION NUMBER

Upper Floridan aquifer	Lower Dublin aquifer
1=TW-1	4=TW-4
2=TW-2	Lower Midville aquifer
3=TW-3	5=TW-5

Figure 13. Percentage composition of major ionic constituents in ground water at the Millhaven site, January 24-25, 1995.

At the Millhaven site, water in the lower zone of the Upper Floridan aquifer can be distinguished from water in the upper and middle zones of the Upper Floridan by the absence of dissolved oxygen and by higher concentrations of dissolved solids, alkalinity as $CaCO_3$, silica, calcium, magnesium, and strontium. Water in the Upper Floridan aquifer can be distinguished from water in the underlying lower Dublin and lower Midville aquifers by higher concentrations of calcium and lower concentrations of sodium. Water in the lower Dublin aquifer may be distinguished from water in the underlying lower Midville aquifer by its higher concentrations of iron, manganese, potassium, chloride, and sulfate.

The trilinear diagram (fig. 13) indicates the Upper Floridan aquifer can be distinguished from the lower Dublin and lower Midville aquifers at the Millhaven site by its differing water type. The Upper Floridan aquifer is characterized by a calcium-bicarbonate type water; whereas, the lower Dublin and lower Midville aquifers are characterized by a sodium-bicarbonate type water.

AQUIFER INTERCONNECTION

Ground-water-level and water-quality data were evaluated to assess the degree of aquifer interconnection between zones of the Upper Floridan aquifer at the Millhaven site. In addition, aquifer tests were conducted at the site to give a qualitative indication of interaquifer leakage between the five water-bearing zones completed as test wells.

Evidence for interaquifer leakage was assessed during five aquifer tests conducted at the site during 1994. For each test, a single zone was pumped and drawdown response was observed in test wells completed in overlying and/or underlying zones (table 7). A measurable drawdown response was observed in adjacent zones during pumping of TW-1, TW-2, and TW-3, completed in the upper, middle, and lower zones of the Upper Floridan aquifer, respectively. Measurable drawdown was not observed in adjacent zones during pumping of TW-4 (lower Dublin) or TW-5 (lower Midville). Although used as a monitoring well, the corehole was not pumped during any of the aquifer tests.

The upper and middle zones of the Upper Floridan aquifer are hydraulically connected at the Millhaven site as evidenced by minimal head difference between the zones (0.09 ft), similarity of water-level fluctuations and trends (fig. 10), drawdown response during aquifer tests (table 7), and similarities in water chemistry (fig. 12).

The lower zone of the Upper Floridan aquifer is hydraulically separated from the overlying middle zone by a laminated clay layer between 222 and 229 ft; although some connection between the zones is indicated by drawdown response during aquifer tests. Hydraulic separation is indicated by differences in water quality between the lower zone and the upper and middle zones (fig. 12); by a slight upward head gradient (2.66 ft) between TW-3 completed in the lower zone and TW-2 completed in the middle zone; and by differences in the magnitude of water-level fluctuations between the lower zone (TW-1) and the upper two zones (TW-1 and TW-2) (fig. 10).

Although water-level fluctuations and trends are similar between TW-1, TW-2, and TW-3, the magnitude of fluctuations is greater in TW-3, probably a result of greater pumping withdrawals from the lower zone of the Upper Floridan aquifer in that area. For example, during July 1994 water levels in TW-3 declined nearly 2.5 ft, followed by rapid recovery; whereas, corresponding changes in TW-1 and TW-2 were less than 1 ft. Similar differences in water-level response were observed during aquifer tests in August 1994 and July 1995.

Pumping TW-3 produced a drawdown response of 0.262 ft in TW-2; however, pumping from TW-2 did not produce a drawdown response in TW-3 (table 7). This difference in drawdown response is due to differences in the water-bearing characteristics of the middle and lower zones of the Upper Floridan aquifer. The greater transmissivity of the middle zone resulted in less drawdown during the aquifer test for TW-2, producing less of a vertical head gradient between the two zones. Conversely, the transmissivity of the lower zone was less and resulted in a greater drawdown, producing more of a vertical head gradient between the zones.

Table 7. Drawdown response in pumped and nearby observation wells during aquifer tests at the Millhaven site
[<, less than. Data from Kidd and Hodges (1994a,b,c,d)]

Pumped wells				Nearby observation wells		
Well number	Water-bearing unit	Pumping rate (gallons per minute)	Drawdown (feet)	Well number	Water-bearing unit	Drawdown (feet)
TW-1	Upper Floridan aquifer, upper zone	53	25.657	TW-2	UFm	0.066
				TW-3	UFl	<.0003
				Corehole	MPc	<.0003
TW-2	Upper Floridan aquifer, middle zone	217	22.212	TW-1	UFu	1.181
				TW-3	UFl	<.0003
				Corehole	MPc	<.0003
TW-3	Upper Floridan aquifer, lower zone	207.5	52.201	TW-2	UFm	.262
				Corehole	MPc	<.0003
				TW-4	LD	<.0003
TW-4	lower Dublin aquifer	76	67.950	TW-3	UFl	<.0003
				Corehole	MPc	<.0003
				TW-5	LM	<.0003
TW-5	lower Midville aquifer	15	158.111	Corehole	MPc	<.0003
				TW-4	LD	<.0003

SUMMARY

The U.S. Department of Energy (DOE), Savannah River Site (SRS), has manufactured nuclear materials for the National defense since the early 1950's. A variety of hazardous materials including radionuclides, volatile organic compounds, and heavy metals, are either disposed of or stored at several locations at the SRS. Contamination of ground water has been detected at several locations within the SRS. Concern has been raised by State of Georgia officials over the possible migration of ground water contaminated with hazardous materials through aquifers underlying the Savannah River into Georgia (trans-river flow).

The U.S. Geological Survey (USGS), in cooperation with the U.S. Department of Energy and Georgia Department of Natural Resources (DNR), is conducting a study to describe ground-water flow and quality near the Savannah River (trans-river flow project).

Geologic, hydrologic, and water-quality data of Coastal Plain sediments collected during 1991-95 are described for the Millhaven test site in northeastern Screven County, Georgia. The Millhaven site consists of one 1,452-foot (ft) deep corehole and five test wells completed at varying depths.

Age-diagnostic paleontologic assemblages from 90 core samples indicate that sediments range in age from at least Santonian or possibly latest Coniacian, to late Eocene zone NP21. Depositional environments of Cretaceous-age sediments are marine, very near shore marine, and nonmarine; Paleocene-age sediments are shallow marine; and Eocene-age sediments are shallow marine.

Water-bearing units at the Millhaven site were related to previously-named hydrogeologic units by comparing core and geophysical data collected at the site to interpreted borehole data from nearby sites reported by previous investigators. This comparison indicates that several hydrogeologic units previously described in the literature are present at the Millhaven site. They are, in order of descending depth: (1) the Floridan aquifer system, comprised of limestone and calcareous sand of Eocene age; (2) the Dublin aquifer system, comprised of sand and clay of Paleocene and Late Cretaceous age; and (3) the Midville aquifer system, comprised of sand and clay of Late Cretaceous age.

Five test wells (TW) were installed at depths ranging from 80 to 1,390 ft to determine hydraulic properties, ground-water levels, and water chemistry of Coastal Plain sediments. The Upper Floridan aquifer at Millhaven consists of three permeable zones—TW-1 screened in sandy limestone in the upper water-bearing zone, TW-2 screened in calcareous sand in the middle water-bearing zone, and TW-3 completed as an open hole in dense limestone in the lower water-bearing zone. TW-4 was completed in the lower Dublin aquifer and TW-5 was completed in the lower Midville aquifer. In addition to the five test wells, the corehole was completed as a piezometer in the upper Dublin confining unit. Upon completion and development of the test wells, continuous water-level recorders were installed, aquifer tests were conducted, and water samples were analyzed for physical characteristics and chemical constituents.

Hydraulic properties of Coastal Plain sediments were determined by (1) analyzing selected core samples to determine vertical hydraulic conductivity and porosity; (2) conducting aquifer tests in five test wells to determine transmissivity, horizontal hydraulic conductivity, and detect any interaquifer leakage induced during test pumping; and (3) estimating horizontal hydraulic conductivity from borehole formation resistivity logs. Values of vertical hydraulic conductivity ranged from 1.15×10^{-5} to 1.19×10^{-1} feet per day (ft/d) in the upper Dublin confining unit, and from 2.83×10^{-6} (estimated) to 1.4×10^{-3} ft/d in the upper Midville confining unit. Transmissivity determined from aquifer tests conducted by students and staff from Clemson University ranged from 1,302 to 5,580 feet squared per day (ft^2/d) in the three wells completed in the Upper Floridan aquifer, with the middle zone having the highest value. Transmissivity in the lower Dublin aquifer was 1,116 ft^2/d. Values of horizontal hydraulic conductivity determined from aquifer tests and estimated from borehole resistivity logs were 13 to 70 ft/d in the Upper Floridan aquifer; 42 ft/d in the Gordon aquifer; 7 ft/d in the Millers Pond aquifer; 22 ft/d in the upper Dublin aquifer; and 10 to 22 ft/d in the lower Dublin aquifer.

Water levels measured during March 1995 indicate a general upward head gradient at the Millhaven site, indicative of potential upward discharge. An examination of hydrographs and a statistical comparison using Spearman's rank correlation coefficient (SRCC) were used to determine the relation between ground-water levels at the Millhaven site with stream stage and precipitation. Water levels in the Upper Floridan aquifer show some response to extreme changes in Savannah River and Brier Creek stages and little response to precipitation at Sylvania, Ga. Water levels in the lower Dublin aquifer show little response to changing precipitation or Savannah River or Brier Creek stages in 1994; however, a more pronounced response to stream stage was observed in 1995. A general water-level decline in the lower Dublin aquifer during 1994 may be related to a general increase in regional ground-water pumping; however, pumping data are not presently (1995) available to confirm. It is likely that ground-water levels in the Upper Floridan aquifer also are affected by evapotranspiration and pumping. Insufficient data are available to assess water-level fluctuations and trends in the lower Midville aquifer.

Water sampled from each of the five zones completed at the Millhaven site is low in dissolved solids and, with the exception of high concentrations of iron in the lower Dublin aquifer, is considered to be of good quality. Analysis of tritium from the five zones were less than the 100 picoCuries per liter (pCi/L) detection limit; and were thus, within U.S. Environmental Protection Agency and Georgia Department of Natural Resources, Environmental Protection Division drinking-water standards. Volatile or semi-volatile organic compounds were not detected in any of the test wells at Millhaven.

Water in the lower zone of the Upper Floridan aquifer can be distinguished from water in the upper and middle zones of the Upper Floridan by the absence of dissolved oxygen and by higher concentrations of dissolved solids, alkalinity as $CaCO_3$, silica, calcium, magnesium, and strontium. Water in the Upper Floridan aquifer can be distinguished from water in the underlying lower Dublin and lower Midville aquifers by higher concentrations of calcium and lower concentrations of sodium. Water in the lower Dublin aquifer may be distinguished from water in the underlying lower Midville aquifer by its higher concentrations of iron, manganese, potassium, chloride, and sulfate. The Upper Floridan aquifer is characterized by a calcium-bicarbonate type water; whereas, the lower Dublin and lower Midville aquifers are characterized by a sodium-bicarbonate type water.

Aquifer interconnection between zones of the Upper Floridan aquifer at the Millhaven site was assessed using ground-water-level and water-quality data. In addition, drawdown response during aquifer tests was evaluated to give an indication of interaquifer leakage between the five water-bearing zones completed as test wells at the Millhaven site.

The upper and middle zones of the Upper Floridan aquifer are hydraulically connected at the Millhaven site as evidenced by minimal head difference between the zones (0.09 ft), similarity of water-level fluctuations and trends, drawdown response during aquifer tests, and similarities in water chemistry. The lower zone of the Upper Floridan aquifer is hydraulically separated from the overlying middle zone as was indicated by differences in water quality, by a slight upward head gradient (2.66 ft), and by differences in water-level fluctuations between the lower zone and the upper two zones. Although hydraulically separated under static conditions, interaquifer leakage between the three zones was indicated by drawdown response during aquifer tests.

SELECTED REFERENCES

Aadland, R.K., and Bledsoe, H.W., 1990, Classification of hydrostratigraphic units at the Savannah River Site, South Carolina: Aiken, S.C., Westinghouse Savannah River Company, WSRC-RP-90-987, 15 p.

Aadland, R.K., Thayer, P.A., and Smits, A.D., 1992, Hydrostratigraphy of the Savannah River Site region, South Carolina and Georgia, *in* Geological Investigations of the central Savannah River area, South Carolina and Georgia, Price, Van, and Fallaw, Wallace [*eds.*]: Augusta, Ga., Carolina Geological Society Fieldtrip Guidebook, November 13-15, 1992, variously paged.

American Society for Testing and Materials, 1980, Laboratory determination of water (moisture) content of soil, rock, and soil-aggregate mixtures: Philadelphia, Pa., ASTM-D-2216-80, 8 p.

____1990, Standard test method for measurement of hydraulic conductivity of saturated porous materials using a flexible wall permeameter (ASTM-D-5084-90): Philadelphia, Pa., American Society for Testing and Materials, 8 p.

Bledsoe, H.W., 1987, SRP baseline hydrogeologic investigation—Phase II: Aiken, S.C., E.I. duPont de Nemours & Co., Savannah River Laboratory, DPST-86-674, variously paged.

____1988, SRP baseline hydrogeologic investigation—Phase III: Aiken, S.C., E.I. duPont de Nemours & Co., Savannah River Laboratory, DPST-88-627, variously paged.

Bledsoe, H.W., Aadland, R.K., and Sargent, K.A., 1990, SRS baseline hydrogeologic investigation—summary report: Aiken, S.C., Westinghouse Savannah River Company, Savannah River Site, WSRC-RP-90-1010, variously paged.

Brooks, Rebekah, Clarke, J.S., and Faye R.E., 1985, Hydrogeology of the Gordon aquifer system of east-central Georgia: Georgia Geologic Survey Information Circular 75, 41 p.

Chowns, T.M., and Williams, C.T., 1983, Pre-Cretaceous rocks beneath the Georgia Coastal Plain—Regional implications *in* Studies related to the Charleston, South Carolina earthquake, 1886—Tectonics and Seismicity, Gohn, G.S. [*ed.*]: U.S. Geological Survey Professional Paper 1313-L, p. 1-42.

Christopher, R.A., 1979a, Normapolles and triporate pollen assemblages from the Raritan and Magothy Formation (Upper Cretaceous) of New Jersey: Palynolgy, v. 3, p. 73-121, plates 1-9.

____1979b, The stratigraphic distribution of Normapolles and triporate pollen in Zones IV, V, and VII of the Raritan and Magothy Formations (Upper Cretaceous) of New Jersey [*abst*]: Palynology, v. 3, p. 281.

____1980, Cretaceous pollen *in* Geology of the Round Bay Quadrangle, Anne Arundel County, Maryland by J.P. Minard [*with a section of* Dinoflagellate-Acritarch palynolgy by F.E. May]: U.S. Geological Survey Professional Paper 1109, 30 p.

____1982a, The occurrence of the *Complexipollis-Atlantapollis* zone (palynomorphs) in the Eagle Ford Group (upper Cretaceous) of Texas: Journal of Paleontology, v. 56, no. 2, p. 525-541, plate 1.

SELECTED REFERENCES—Continued

____1982b, Palynostratigraphy of the basal Cretaceous Units of the eastern Gulf and southern Atlantic Coastal Plains, *in* Proceedings Second Symposium on the Geology of the Southeastern Coastal Plain, Arden, D.D., Beck, B.F., and Morrow, Eleanore [*eds.*]: Georgia Geologic Survey Information Circular 53, p. 10-23, plates 1-3.

Christopher, R.A., Owens, J.P., and Sohl, N.F., 1979, Late Cretaceous palynomorphs from the Cape Fear Formation of North Carolina: Southeastern Geology, v. 20, no. 3, p. 145-159.

Clarke, J.S., Brooks, Rebekah, and Faye, R.E., 1985, Hydrogeology of the Dublin and Midville aquifer systems of east-central Georgia: Georgia Geologic Survey Information Circular 74, 62 p.

Clarke, J.S., Falls, W.F., Edwards, L.E., Frederiksen, N.O., Bybell, L.M., Gibson, T.G., and Litwin, R.J., 1994, Geologic, hydrologic, and water-quality data for a multi-aquifer system in Coastal Plain sediments near Millers Pond, Burke County, Georgia, 1992-93: Georgia Geologic Survey Information Circular 96, 34 p.

Cooper, H.H., and Jacob, C.E., 1946, A generalized graphical method for evaluating formation constants and summarizing well-field history: American Geophysical Union, v. 27, no. 4, p. 526-534.

Doyle, J.A., 1969, Angiosperm pollen evolution and biostratigraphy of the basal Cretaceous formations of Maryland, Delaware, and New Jersey, Abstracts with Programs: Geological Society of America, v. 1, p. 51

Doyle, J.A., and Robbins, E.I., 1977, Angiosperm pollen zonation of the continental Cretaceous of the Atlantic Coastal Plain and its application to deep wells in the Salisbury embayment: Palynology, v. 1, p. 43-78.

Dunham, R.J., 1962, Classification of carbonate rocks according to depositional texture, *in* Classification of carbonate rocks, W.E. Ham [*ed.*]: American Association of Petroleum Geologists Memoir 1, p. 108-121.

Edwards, L.E., 1980, Dinoflagellate biostratigraphy--a first look, *in* Reinhardt, Juergen, and Gibson, T.G., Upper Cretaceous and lower Tertiary geology of the Chattahoochee River Valley, western Georgia and eastern Alabama, *in* Excursions in Southeastern geology, Frey, R.W., [*ed.*]: Geological Society of America Field Trip Guidebook, 1980 Annual Meeting, v. 2, p. 424-427.

___1989, Dinoflagellate cysts from the lower Tertiary formations, Haynesville cores, Richmond County, Virginia; *in*: Mixon, R.B. (*ed.*), Geology and paleontology of the Haynesville cores, northeastern Virginia Coastal Plain: U.S. Geological Survey Professional Paper 1489, p. C1-C12.

Edwards, L.E., and Frederiksen, N.O., 1992, Paleogene palynomorph correlations in eastern Georgia *in* Abstracts with Programs, Southeastern Section, March 1992: Boulder, Co., Geological Society of America v. 24, no. 2, p. 46.

Edwards, L.E., Goodman, D.K., and Witmer, R.J., 1984, Lower Tertiary (Pamunkey Group) dinoflagellate biostratigraphy, Potomac River area, Virginia and Maryland, *in* Frederiksen, N.O., and Krafft, K. (*eds.*), Cretaceous and Tertiary stratigraphy, paleontology, and structure, southwestern Maryland and northeastern Virginia: American Association of Stratigraphic Palynologists Field Trip Guidebook, p. 137-152.

Fallow, E.C., and Price, Van, 1995, Stratigraphy of the Savannah River Site and vicinity: Southeastern Geology, v. 35, no. 1, p. 21-58.

Falls, W.F., Baum, J.S., and Edwards, L.E., 1994, Sedimentological techniques applied to the hydrology of the Atlantic Coastal Plain in South Carolina and Georgia near the Savannah River Site, *in* Abstracts with Programs, Southeastern Section, March 1994: Boulder, Co., Geological Society of America, v. 26, no. 4, p. 13.

Falls, W.F., and Baum, J.S., 1995, Recognition of the Millers Pond aquifer in the vicinity of Burke County, Georgia *in* Abstracts with Programs, Southeastern Section, March 1995: Boulder, Co., Geological Society of America, v. 27, no. 2, p. 52.

Falls, W.F., Prowell, D.C., Edwards, L.E., Frederiksen, N.O., Gibson, T.G., Bybell, L.M., and Gohn, G.S., 1993, Preliminary correlation of geologic units in three coreholes along the Savannah River in Burke and Screven Counties, Georgia, *in* Abstracts with Programs, Southeastern Section, March 1993: Boulder, Co., Geological Society of America, v. 25, no. 4, p. 14.

Faye, R.E. and Smith, W.G., 1994, Relations of borehole resistivity to the horizontal hydraulic conductivity and dissolved solids concentration in water of clastic Coastal Plain aquifers in the Southeastern United States: U.S. Geological Survey Water-Supply Paper 2414, 33 p.

Frederiksen, N.O., 1991, Midwayan (Paleocene) pollen correlations in the eastern United States: Micropaleontology, v. 37, no. 2, p. 101-123, plate 1.

Frederiksen, N.O., and Christopher, R.A., 1978, Taxonomy and biostratigraphy of Late Cretaceous and Paleogene triatriate pollen from South Carolina: Palynology, v. 2, p. 113-145, plates 1-3.

Freeze, R.A., and Cherry, J.A., 1979, Groundwater: Englewood Cliffs, N.J., Prentice Hall, Inc., 604 p.

Geological Society of America, 1991, Rock color chart: Boulder, Co., Geological Society of America, 1 sheet.

SELECTED REFERENCES—Continued

Georgia Department of Natural Resources, 1993, Rules for safe drinking water, Chapter 391-3-5: Atlanta, Ga., Georgia Department of Natural Resources, Environmental Protection Division, p. 601-729.

Gohn, G.S., 1992, Revised nomenclature, definitions, and correlations for the Cretaceous formations in USGS-Clubhouse Crossroads no. 1, Dorchester County, South Carolina: U.S. Geological Survey Professional Paper 1518, 39 p.

Hazel, J.E., 1968, Ostracodes from the Brightseat Formation (Danian) of Maryland: Journal of Paleontology, v. 42, p. 100-142.

Hazel, J.E., Bybell, L.M., Christopher, R.A., Frederiksen, N.O., May, F.E., McLean, D.M., Poore, R.Z., Smith, C.C., Sohl, N.F., Valentine, P.C., and Witmer, R.J., 1977, Biostratigraphy of the deep corehole (Clubhouse Crossroads corehole 1) near Charleston, South Carolina, *in* Studies related to the Charleston, South Carolina earthquake of 1886—A preliminary report, Rankin, D.W., *ed.*: U.S. Geological Survey Professional Paper 1028, p. 71-89.

Hazel, J.E., Edwards, L.E., and Bybell, L.M., 1985, Significant unconformities and the hiatuses represented by them in the Paleogene of the Atlantic and Gulf Coastal Province, *in* Interregional Unconformities and Hydrocarbon Accumulation, Schlee, J.S., *ed.*: American Association of Petroleum Geologists Memoir 36, p. 59-66.

Heath, R.C., 1983, Basic ground-water hydrology: U.S. Geological Survey Water-Supply Paper 2220, 84 p.

Hetrick, J.H., 1992, A geologic atlas of the Wrens-Augusta area: Georgia Geologic Survey Geologic Atlas 8, 3 sheets, scale 1:100,000.

Huddlestun, P.F., and Summerour, J.H., 1995, The lithostratigraphic framework of the uppermost Cretaceous and lower Tertiary of eastern Burke County, Georgia: Atlanta, Ga., Georgia Geologic Survey, Project report prepared for U.S. Geological Survey under cooperative agreement number 1434-92-A-0959, 196 p.

Iman, R.L., and Conover, W.J., 1983, A modern approach to statistics: John Wiley and Sons, New York, N.Y., p. 325-345.

Kidd, N.B, and Hodges, R.A., 1994a, Aquifer performance test report—Millhaven TW-1, Screven County, Georgia, October 3-10, 1994, *in* D.S. Snipes, S.M. Benson, Van Price, Jr. (*eds.*), Hydrologic Properties of Aquifers in the Central Savannah River Area: Clemson, S.C., Department of Geological Sciences, Clemson University, Performed for SCURF task order 94, v. 2, p. 2-22.

____1994b, Aquifer performance test report--Millhaven TW-2, Screven County, Georgia, November 11-15, 1994, *in* D.S. Snipes, S.M. Benson, Van Price, Jr. (*eds.*), Hydrologic Properties of Aquifers in the Central Savannah River Area: Clemson, S.C., Department of Geological Sciences, Clemson University, performed for SCURF task order 94, v. 2, p. 23-43.

____1994c, Aquifer performance test report--Millhaven TW-3, Screven County, Georgia, November 3-11, 1994, *in* D.S. Snipes, S.M. Benson, Van Price, Jr. (*eds.*), Hydrologic Properties of Aquifers in the Central Savannah River Area: Clemson, S.C., Department of Geological Sciences, Clemson University, performed for SCURF task order 94,v. 2, p. 44-64.

____1994d, Aquifer performance test report—Millhaven TW-4, Screven County, Georgia, November 30-December 8, 1994, *in* D.S. Snipes, S.M. Benson, Van Price, Jr. (*eds.*), Hydrologic Properties of Aquifers in the Central Savannah River Area: Clemson, S.C., Department of Geological Sciences, Clemson University, performed for SCURF task order 94, v. 2, p. 65-85.

Krause, R.E., and Randolph, R.B., 1989, Hydrology of the Floridan aquifer system in southeast Georgia and adjacent parts of Florida and South Carolina: U.S. Geological Survey Professional Paper 1403-D, 65 p.

Logan, W.R., and Euler, G.M., 1989, Geology and ground-water resources of Allendale, Bamberg, and Barnwell Counties and part of Aiken County, South Carolina: South Carolina Water Resources Commission Report 155, 113 p.

Lucas-Clark, Joyce, 1992, Some characteristic fossil dinoflatgellate cysts of Eocene strata, Savannah River Site, South Carolina, *in* Geological investigations of the central Savannah River area, South Carolina and Georgia, Fallaw, Wallace, and Price, Van [*eds.*]: Carolina Geological Field Trip Guidebook 1992, p. B-VII-1—B-VII-6.

Martini, Erlend, 1971, Standard Tertiary and Quaternary calcareous nannoplankton zonation *in* Farinacci, Anna (*ed.*), *in* proceedings, II Planktonic Conference, Rome, Italy: Rome, Edizioni Tecnoscienza, v. 2, p. 739-785.

Milby, B.J., Joiner, C.N., Cressler, A.M., and West, C.T., 1991, Ground-water conditions in Georgia, 1990: U.S. Geological Survey Open-File Report 91-486, 147 p.

Miller, J.A., 1986, Hydrogeologic framework of the Floridan aquifer system in Florida, and in parts of Georgia, Alabama, and South Carolina: U.S. Geological Survey Professional Paper 1403-B, 91 p.

SELECTED REFERENCES—Continued

Prowell, D.C., Christopher, R.A., Edwards, L.E., Bybell, L.M., and Gill, H.E., 1985, Geologic section of the updip Coastal Plain from central Georgia and western South Carolina: U.S. Geological Survey Miscellaneous Field Studies Map MF-1737.

Siple, G.E., 1967, Geology and ground water of the Savannah River Plant and vicinity, South Carolina: U.S. Geological Survey Water-Supply Paper 1841, 113 p.

Sirkin, L.A., 1974, Palynology and stratigraphy of Cretaceous strat in Long Island, New York, and Block Island, Rhode Island: U.S. Geological Survey Journal of Research, v. 2, p. 431-440.

Sohl, N.F., and Owens, J.P., 1991, Cretaceous stratigraphy of the Carolina Coastal Plain *in* The Geology of the Carolinas, Horton, J.W., Jr., and Zullo, V.A. [*eds.*]: Knoxville, Tn., Carolina Geological Society 50th Anniversary Volume, University of Tennessee Press, p. 191-220.

Summerour, J.H., Shapiro, E.A., Lineback, J.A., Huddlestun, P.F., and Hughes, A.C., 1994, An investigation of tritium in the Gordon and other aquifers in Burke County, Georgia—Final Report, Georgia Geologic Survey Information Circular 95, 93 p.

U.S. Environmental Protection Agency, 1990a, Secondary maximum contaminant levels, National secondary drinking-water regulations: U.S. Code of Federal Regulations, section 143.3, title 40, parts 100-149, *revised* July 1990, p. 674.

____1990b, Maximum contaminant levels, National primary drinking-water regulations: U.S. Code of Federal Regulations, subpart B, title 40, parts 100-149, *revised* July 1990, p. 559-563.

Vincent, H.R., 1982, Geohydrology of the Jacksonian aquifer in central and east- central Georgia: Georgia Geologic Survey Hydrologic Atlas 8, 3 sheets.

Wentworth, C.K., 1922, A scale of grade and class terms for clastic sediments: Journal of Geology, v. 30, p. 377-392.

Williams, G.L., Stover, L.E., and Kidson, E.J., 1993, Morphology and stratigraphic ranges of selected Mesozoic-Cenozoid dinoflagellate taxa in the Northern Hemisphere: Ottawa, Ontario, Canada, Geological Survey of Canada Papers 92-10, 137 p.

Wolfe, J.A., 1976, Stratigraphic distribution of some pollen types from the Campanian and lower Maestrichtian rocks (Upper Cretaceous) of the Middle Atlantic States: U.S. Geological Survey Professional Paper 977, p. 1-18.

APPENDIX

Lithologic description of Millhaven core

Screven County, Georgia

APPENDIX

Lithologic description of Millhaven core, Screven County, Georgia
[Unless otherwise reported, core recovery is 100 percent; ft, foot; mm, grain size, in millimeters; 10R4/6, color code described by The Geological Society of America Rock Color Chart (Geological Society of America, 1991)]

Lithologic description	Depth below land surface, in feet
No recovery.	0-6
Sand, fine to coarse with granules (5-10 percent) and pebbles (5 percent, 2-15 mm) in lags at 9, 11, 13, 15 and 17 ft, poorly to very poorly-sorted, loose to clay-bound, clay matrix (5-20 percent), dark heavy minerals (1 percent), moderate reddish brown (10R4/6), dusky yellow (5Y6/4), light olive gray (5Y6/1), sharp lower contact.	6-17
Sand, very fine to fine, moderately sorted, clay-bound, clay matrix (20-35 percent), laminated, dark yellow orange (10YR8/6) down to moderate reddish brown (10R4/6) and yellowish gray (5Y8/1), lower contact not recovered.	17-21
No recovery.	21-25
Sand, very fine to fine, moderately sorted, clay-bound, clay matrix (30-45 percent), laminated, dark yellow orange (10YR6/6) to very pale orange (10YR8/2), sharp lower contact.	25-33
Sand, very fine to fine, moderately sorted, loose to clay-bound, laminated, abundant clay laminae (39-42 ft), dark yellow orange (10YR6/6) to yellowish gray (5Y8/1), sharp lower contact.	33-42
Sand, fine to medium, moderately sorted, loose to clay-bound, clay matrix (5-15 percent), mica (1 percent), lignite at 50 and 52 ft, yellowish gray (5Y8/1) mottled with dark yellow orange (10YR6/6) beds of dark yellowish orange (10YR6/6) to moderate yellowish brown (10YR5/4) clay at 44, 48, 49, and 51 ft, lower contact not recovered, recovery 90 percent.	42-53
Clay, bedding disturbed by coring, sand (10-20 percent), carbonate clasts at 54 ft, dark yellowish orange (10YR6/6) to white (N9) mottled with blackish red (5R2/2), sharp lower contact.	53-55
Carbonate, grainstone of unidentified grains and fossils including pelecypods, bryozoans, gastropods and echinoderms, dissolution of some of the pelecypods and gastropods from 55 to 70 ft, loose to partially lithified, white (N9) with dark yellowish orange \ (10YR6/6) staining from 65 to 80 ft, gradational lower contact, recovery 78 percent.	55-84
Carbonate, grainstone of unidentified grains and fossils including pelecypods, bryozoans, and gastropods, loose to partially lithified, very pale orange (10YR8/2) to grayish yellow (5Y8/4), gradational lower contact, recovery 82 percent.	84-101
Carbonate, packstone of unidentified grains, pelecypods and bryozoan, carbonate grains are smaller than above, carbonate matrix (10-20 percent), loose to partially lithified, very pale orange (10YR8/2) to grayish yellow (5Y8/4), sharp lower contact.	101-106
Carbonate, grainstone of unidentified grains, pelecypods, bryozoans, and foraminifers, carbonate grains are coarse than above, quartz sand (0-10 percent, 30 percent at base of unit), glauconite (1-2 percent), irregularly shaped carbonate clasts at 123 ft, grayish yellow (5Y8/4) to pale yellowish orange (10YR8/6), lower contact not recovered.	106-123
No recovery.	123-128
Sand, fine to medium, moderately sorted, loose with partially lithified intervals from 131 to 132.5 ft and from 134 to 134.5 ft, fossils (5-15 percent, 30 percent in partially lithified intervals) including pelecypods, bryozoans, and foraminifers, glauconite (1-2 percent), grayish yellow (5Y8/4) to yellowish gray (5Y7/2), lower contact not recovered, recovery 71 percent	128-149

APPENDIX—Continued

Lithologic description of Millhaven core, Screven County, Georgia—Continued
[Unless otherwise reported, core recovery is 100 percent; ft, foot; mm, grain size, in millimeters; 10R4/6, color code described by The Geological Society of America Rock Color Chart (Geological Society of America, 1991)]

Lithologic description	Depth below land surface, in feet
Sand, medium, well-sorted, loose to partially lithified, carbonate (10-40 percent) including carbonate matrix (10-20 percent) unidentified grains, pelecypods, bryozoans, and foraminifers, glauconite (2 percent), yellowish gray (5Y7/2) to pale yellowish orange (10YR8/6), gradational lower contact.	149-175
Sand, fine to medium , moderately sorted, carbonate (10-40 percent) including bryozoans and pelecypods, glauconite (1-2 percent), silica- replacement of carbonate in thin (0.2-0.5 ft) beds at 175, 180, 183, and 195 ft and thick (1.0-1.5 ft) beds at 187, 189, and 199 ft, grayish yellow (5Y8/4) to light olive gray (5Y6/1), lower contact not recovered, recovery 90 percent.	175-204
Carbonate, packstone to grainstone, fossils include pelecypods, bryozoans and gastropods, glauconite (5-8 percent), quartz sand (5-25 percent), very light gray (N8) to bluish white (5B9/1), sharp lower contact.	204-210
Sand, fine to medium, well-sorted to moderately sorted, loose to partially lithified, matrix of carbonate (10-15 percent) and clay (10-15 percent), wavy laminae (10 percent) of greenish gray (5GY6/1) clay and silty clay, fossils (5-20 percent) include pelecypods and bryozoans, glauconite (2-3 percent), medium light gray (N6), lower contact not recovered, recovery 92 percent.	210-222
Clay, laminated, carbonate matrix (10-20 percent), thin beds (0.1 ft) and laminae of very fine sand, greenish gray (5GY6/1) to dark greenish gray (5GY4/1), sharp lower contact, recovery 86 percent.	222-229
Carbonate, grainstone, fossils include pelecypods, gastropods and bryozoans, glauconite (2-5 percent), sand (5-10 percent) light gray (N7) to very light gray (N8), gradational lower contact.	229-232
Carbonate, grainstone to packstone, unidentified grains and fossils including pelecypods, bryozoans and gastropods, quartz sand (10-35 percent), glauconite (5-10 percent), carbonate matrix (0-10 percent), loose to lithified, burrow-mottled from 240 to 245 ft, very light gray (N8), gradational lower contact.	232-245
Carbonate, grainstone to packstone, fossils include pelecypods, bryozoans, gastropods, and a few brachiopods, carbonate matrix (0-20 percent), glauconite (5-10 percent), dissolution of gastropods and pelecypods, vuggy porosity from 252 to 264 ft, loose to lithified, light bluish gray (5B7/1) to very light gray (N8), sharp lower contact, recovery 95 percent.	245-285
Carbonate, wackestone, fossils (10-15 percent) include gastropods, glauconite (0-1 percent), pyrite (1-2 percent) from 293 to 296 ft, burrow-mottled, dissolution of pelecypods and no clay matrix in an interval from 296 to 299 ft light olive gray (5Y6/1) to light greenish gray (5GY8/1), sharp lower contact.	285-300
Carbonate, grainstone to packstone, fossils include pelecypods, and bryozoans with a few brachiopods, shark teeth and calcareous worm tubes, phosphatic clasts (1 percent), pyrite (1 percent), light olive gray (5Y6/1) to light greenish gray (5GY8/1), sharp lower contact.	300-308
Carbonate, mudstone to wackestone, fossils (5-15 percent) include bryozoans, foraminifers, pelecypods, and calcareous worm tubes, unidentified bone fragments at 321 ft, glauconite (0-1 percent), burrow-mottled, light olive gray (5Y6/1) to pale olive (10Y6/2), sharp lower contact.	308-332

APPENDIX—Continued

Lithologic description of Millhaven core, Screven County, Georgia—Continued
[Unless otherwise reported, core recovery is 100 percent; ft, foot; mm, grain size, in millimeters; 10R4/6, color code described by The Geological Society of America Rock Color Chart (Geological Society of America, 1991)]

Lithologic description	Depth below land surface, in feet
Carbonate, grainstone to packstone, fossils include bryozoans, and pelecypods with a few echinoids and shark teeth, phosphatized internal molds of gastropods, dissolution of a few pelecypods and gastropods, irregularly bedded, loose to lithified, light olive gray (5Y6/1), sharp lower contact.	332-336
Carbonate, mudstone to wackestone, fossils (5-15 percent) include bryozoans, foraminifers, pelecypods, glauconite (1-2 percent), pyrite (1 percent) from 353 to 354 ft, small fragments of lignite (1 percent) disseminated in matrix, irregularly shaped patches (5-10 percent) of fossiliferous carbonate with phosphatized carbonate clasts from 336 to 345 ft, burrow mottled to wavy laminated, partially lithified to lithified, light olive gray (5Y6/1) to greenish gray (5GY6/1), gradational lower contact.	336-351
Carbonate, mudstone to wackestone, fossils (5-15 percent) include shark teeth, foraminifers and spicules, exoskeleton of unidentified crustacean from 359 ft, clay (20-30 percent) disseminated in carbonate matrix, lignite (1 percent), phosphatized sand-size carbonate grains (10-15 percent) from 364 to 365 ft, wavy laminated to burrow mottled, partially lithified, greenish gray (5GY6/1), sharp lower contact.	351-365
Carbonate, grainstone to packstone, fossils include bryozoans, and large pelecypods, fragmented oysters, dissolution of some of the pelecypods, pelecypod molds from 365 to 366 ft infilled with fine matrix of carbonate and clay from overlying unit, phosphatized carbonate surface with pyrite (2 percent) at 365 ft, glauconite (2-5 percent), quartz sand (5-15 percent), lithified, light gray (N7), sharp lower contact.	365-368
Carbonate, mudstone to wackestone, whole and fragmented pelecypods (5-15 percent) including large oysters, fine to medium quartz sand (5-40 percent), glauconite (2-3 percent), loose to partially lithified, mottled to wavy laminated, light greenish gray (5G8/1), sharp lower contact, recovery 96 percent.	368-381
Sand, medium to coarse, moderately sorted, loose to partially lithified, sand-size carbonate grains (10-20 percent), fossils include pelecypods (10-25 percent), glauconite (2-5 percent), lithified beds of sandy carbonate including the interval from 389 to 393 ft, light olive gray (5Y6/1) to light greenish gray (5GY8/1), sharp lower contact, recovery 65 percent.	381-401
Sand, fine to medium, well-sorted to moderately sorted, loose to partially lithified, sand-size carbonate grains and pelecypods (10-25 percent), matrix of carbonate (5-15 percent) and clay (5-15 percent), large pelecypods including oysters at 413 ft, glauconite (2-5 percent), bed of lithified fossiliferous carbonate from 406 to 407 ft, light olive gray (5Y5/2), gradational lower contact, recovery 65 percent.	401-415
Carbonate, wackestone, fossils (10-20 percent) include pelecypods, foraminifers and spicules, very fine quartz sand and silt (10-30 percent), clay matrix (10-15 percent), glauconite (5-10 percent, 30 percent from 461.5 to 462 ft), beds of very fine sand from 450 to 451 ft, 454 to 457 ft, and 460 to 462 ft, burrow-mottled to wavy laminated, partially lithified to lithified, light olive gray (5Y5/2), sharp lower contact.	415-462
Carbonate, wackestone to packstone, fossils oysters, other pelecypods, and bryozoans, glauconite (20-25 percent), very fine to fine quartz sand (5-15 percent), dissolution of pelecypods at 462 and 469 ft, lithified, light olive gray (5Y5/2), sharp lower contact.	462-470

APPENDIX—Continued

Lithologic description of Millhaven core, Screven County, Georgia—Continued
[Unless otherwise reported, core recovery is 100 percent; ft, foot; mm, grain size, in millimeters; 10R4/6, color code described by The Geological Society of America Rock Color Chart (Geological Society of America, 1991)]

Lithologic description	Depth below land surface, in feet
Carbonate, wackestone, fossils include pelecypods, bryozoans, and foraminifers, very fine quartz sand (10-15 percent), glauconite (5-15 percent), thin beds (0.2 ft) of glauconitic (30-50 percent) sand at 472 and 473 ft, loose to partially lithified, light olive gray (5Y5/2), sharp lower contact.	470-473
Sand, very fine to fine, moderately sorted, loose to partially lithified with lithified carbonate beds from 480 to 481 ft, 483 to 484 ft, and 492-493 ft, glauconite (5-25 percent), carbonate grains and small pelecypod fragments (5-15 percent), matrix of carbonate (5-10 percent) and clay (5-10 percent), light olive gray (5Y6/1) and greenish gray (5GY6/1), lower contact not recovered.	473-499
Clay, laminated, silty, greenish gray (5G6/1), gradational lower contact.	499-500
Sand, very fine, well sorted, fine to very coarse from 503 to 504 ft, loose to clay-bound, clay matrix (10-20 percent), mica (1-2 percent), light gray (N7) to very light gray (N8), light bluish gray (5B7/1) to light gray (N7) clay beds (0.5 ft) at 501, 502 and 504 ft, sharp lower contact.	499-505
Clay, massive, silty (5-10 percent) from 505 to 512 ft, very fine sand (25-35 percent) from 512 to 517 ft, light olive brown (5Y5/6) to light bluish gray (5B7/1) with dusky yellow (5Y6/4) staining from 505 to 508 ft, and patchy root-like pattern of pale red (10R6/2) staining from 511 to 514 ft, sharp lower contact.	505-516
Clay, massive, light olive brown (5Y5/6) with root-like and patchy pattern of dusky yellow (5Y6/5) staining, gradational lower contact.	516-520
Clay, massive, amount (20-50 percent) of very fine sand increasing with depth, very light gray (N8), vertically elongated root-like and patchy pattern of dusky yellow staining, gradational lower contact.	520-525
Sand, very fine, well-sorted, clay-bound, grading down to fine to medium, moderately sorted, loose, clay matrix (10-20 percent) with clay laminae from 525 to 529 ft, clay matrix (0-5 percent) from 529 to 535 ft, mica (1-2 percent), black heavy minerals (1 percent), clay clasts at 534 ft, wavy laminated to planar laminated, light gray (N7) to light olive gray (5Y6/1), lower contact not recovered, recovery 80 percent.	525-535
No recovery.	535-539
Sand, fine to very coarse, granules (0-20 percent), pebbles (0-15 percent), moderately to very poorly sorted, loose, clay matrix (0-10 percent), sandy clay clasts at 554 and 560 ft, green clay clasts (10-15 mm) at 569.5 ft, bed of olive black (5Y2/1) clay with lignite from 564 to 565 ft, mica (1-2 percent), heavy minerals including black, amber and red, cross-bedded from 545 to 547 ft, light brownish gray (5YR6/1) to light olive gray (5Y6/1), sharp lower contact, recovery 75 percent.	539-571
Clay, laminated, silty (10 percent), mica (1-2 percent), lignite (1 percent), olive black (5Y2/1) to greenish black (5G2/1), gradational lower contact.	571-577
Clay, laminated to wavy laminated with burrows, pelecypods (20-30 percent), silt (15-35 percent), glauconite (2-5 percent) from 577 to 582 ft, mica (2-3 percent), irregularly shaped beds and nodules of sandy limestone, amount (10-35 percent) of very fine to fine quartz sand increases downward from 590 to 595 ft, phosphate granules and shark teeth from 592 to 595 ft, greenish black (5G2/1), sharp lower contact.	577-595

APPENDIX—Continued

Lithologic description of Millhaven core, Screven County, Georgia—Continued
[Unless otherwise reported, core recovery is 100 percent; ft, foot; mm, grain size, in millimeters; 10R4/6, color code described by The Geological Society of America Rock Color Chart (Geological Society of America, 1991)]

Lithologic description	Depth below land surface, in feet
Clay, laminated with silt and sand filled burrows, laminae and thin beds of silt and very fine sand, clay matrix contains carbonate (5-10 percent), silt (5-15 percent), mica (1-2 percent) and lignite (1 percent), olive black (5Y2/1) to greenish black (5G2/1), sharp lower contact.	595-622
Sand, very fine to coarse with granules of phosphate (5 percent), poorly to very poorly sorted, clay-bound, clay matrix (10-15 percent), clay clasts (5-10 percent, 2-10mm), glauconite (10 percent), foraminifers (5 percent), carbonate matrix (5 percent), fragments of lignite (2-3 percent) at 625 ft, sharp lower contact.	622-625
Clay, wavy laminated to burrow-mottled, fine to coarse sand (15-30 percent), glauconite (20-25 percent), carbonate matrix (10-15 percent), large pelecypod fragments (0-5 percent), other fossils observed include foraminifers, shark tooth, and ostracods, very light gray (N8) carbonate bed at 629 ft, mica (1-2 percent), olive gray (5Y4/1), gradational lower contact.	625-633
Sand, fine to very coarse with granules (2-5 percent), poorly to very poorly sorted, loose to lithified, matrix of clay (5-30 percent) and carbonate (5-15 percent), irregularly shaped bed of carbonate-cemented sand, granules of smoky and clear quartz, glauconite (0-5 percent), pelecypods and gastropods (0-5 percent), shark tooth, fragments of lignite at 642 ft, olive gray (5Y4/1) to olive black (5Y2/1), sharp lower contact.	633-642
Clay, massive, fine to medium sand (10-35 percent), mica (1-2 percent), greenish gray (5GY6/1) to dark greenish gray (5G4/1), gradational lower contact.	642-648
Sand, fine to medium with coarse to very coarse sand from 650 to 651 ft, moderately to poorly sorted, loose, clay matrix (5-10 percent), mica (1-2 percent, 1-2 mm), grayish green (10GY5/2), sharp lower contact.	648-652
Clay, massive, fine to coarse sand (25-45 percent), mica (1-2 percent, 1-2 mm), greenish gray (5G6/1), patchy and root-like pattern of pale red (5R6/2) and dusky yellow (5Y6/4) staining, gradational lower contact.	652-657
Sand, fine to very coarse with granules (0-10 percent), moderately to very poorly sorted, clay-bound, clay matrix (10-20 percent), black heavy minerals and garnet concentrated in laminae at 671 ft, mica (1-2 percent, 1-2 mm), cross-bedded from 664 to 665 ft, light greenish gray (5G8/1) to greenish gray (5G6/1) with grayish red purple (5RP4/2) and dusky yellow (5Y6/4) staining, sharp lower contact, recovery 93 percent.	657-671
Clay, massive, medium to coarse sand (25-40 percent), mica (1 percent), light greenish gray mottled with grayish red purple (5RP4/2) and moderate yellow (5Y7/6), sharp lower contact.	671-675
Sand, medium to very coarse, poorly sorted, loose, clay matrix (5-10 percent), mica (1 percent), light greenish gray (5G8/1), recovery 30 percent.	675-680
Clay, massive, fine to medium sand (25-50 percent), medium light gray (N6) with patchy light olive brown (5Y5/6) and grayish red (5R7/2) staining, gradational lower contact.	680-685
Sand, fine, well-sorted, loose, clay matrix (5-10 percent), mica (1 percent), black heavy minerals (1 percent), very light gray (N8), sharp lower contact, recovery 30 percent.	685-689

APPENDIX—Continued

Lithologic description of Millhaven core, Screven County, Georgia—Continued
[Unless otherwise reported, core recovery is 100 percent; ft, foot; mm, grain size, in millimeters; 10R4/6, color code described by The Geological Society of America Rock Color Chart (Geological Society of America, 1991)]

Lithologic description	Depth below land surface, in feet
Sand fine to medium and medium to very coarse with granules (0-10 percent), moderately to very poorly sorted, loose to clay-bound, clay matrix (5-10 percent), beds of sandy clay from 689 to 691 ft, and 699 to 700 ft, granules (25-35 percent) from 699 to 700 ft, pebbles (1-2 percent, 4-10 mm) from 704 to 708 ft, mica (1-2 percent, 1-2 mm), black heavy minerals (1 percent), yellowish gray (5Y7/2) to very light gray (N8), lower contact not recovered, recovery 91 percent.	689-724
Sand, fine, well sorted, loose, clay matrix (0-5 percent), mica (1 percent), black heavy minerals (1-2 percent) concentrated on cross-beds, very light gray (N8) to light olive gray (5Y6/1), sharp lower contact.	724-730
Sand, medium to coarse, moderately sorted, loose, clay matrix (5-10 percent), mica (1-2 percent, 1-2 mm), black heavy minerals (1 percent) and lignite (1 percent) in horizontal laminae, thin bed of brownish gray (5YR4/1) clay at 733, light olive gray (5Y6/1) lower contact not recovered, recovery 45 percent.	730-741
No recovery.	741-750
Sand, fine to medium grading rapidly to coarse to very coarse with granules (30-35 percent) and pebbles (5 percent, 4-8 mm) below 753 ft, moderately to very poorly sorted, clay matrix (5 percent), mica (2-3 percent, 1-2 mm), lignite (2-3 percent), laminated to cross-bedded from 750 to 752 ft, light olive gray (5Y6/1), sharp lower contact.	750-755
Clay, massive, fine sand (25-35 percent), very light gray (N8) mottled with moderate reddish brown (10R4/6), grades downward to loose, fine to coarse sand below 758 ft, lower contact not recovered.	755-759
No recovery.	759-762
Sand, fine to medium and medium to very coarse granules (2-3 percent) and pebbles (2-3 percent, 4-8 mm) from 762 to 768 ft, moderately to very poorly sorted, loose to clay-bound, clay matrix (5-15 percent), brownish gray clay laminae and bed from 768 to 770 ft, mica (1-2 percent, 1-3 mm), heavy minerals (1 percent) include garnet, light olive gray (5Y6/1) to very light gray (N8), sharp lower contact, recovery (86 percent).	762-776
Clay, massive, mica (1 percent), light gray (N7), patchy and root-like pattern of grayish red (5R4/2) and dusky red (5R3/4) staining, lower contact not recovered, recovery 95 percent.	776-786
Sand, fine, well-sorted, loose, mica (1-2 percent), very light gray (N8), sharp lower contact, recovery 25 percent.	786-788
Clay, massive, sand (0-25 percent) with thin beds of very fine to fine sand from 791 to 792 and 797 to 798 ft, mica (1-3 percent, 1-2 mm) light gray mottled with light brown (5YR5/6) and light olive brown (5Y5/6) staining, lower contact sharp, recovery 95 percent.	788-798
Clay, massive, light gray (N7), patchy and fractured pattern stained with pale red purple (5RP6/2), dusky red (5R3/4) and grayish yellow (5Y8/4), lower contact not recovered.	798-806
No recovery.	806-811
Clay, massive, silty (20-25 percent) from 817 to 820 ft, very fine to fine sand (20-35 percent) from 820 to 821 ft, light gray (N7) to medium light gray (N6), patchy and root-like pattern of dusky red (5R3/4) and light olive brown (5Y5/6), gradational lower contact.	811-821

APPENDIX—Continued

Lithologic description of Millhaven core, Screven County, Georgia—Continued
[Unless otherwise reported, core recovery is 100 percent; ft, foot; mm, grain size, in millimeters; 10R4/6, color code described by The Geological Society of America Rock Color Chart (Geological Society of America, 1991)]

Lithologic description	Depth below land surface, in feet
Sand, very fine to fine from 821 to 822 ft, fine to very coarse with smoky quartz and clear quartz granules (5-10 percent), moderately to very poorly sorted, loose to clay-bound, clay matrix (0-10 percent), thin beds and laminae of dark gray (N3) clay from 822 to 826 ft, fragments (20-40 mm) of lignite, pyrite associated with lignite fragments, mica (1-2 percent 1-2 mm), yellowish gray (5Y7/2) to light gray (N7), lower contact not recovered, recovery 60 percent.	821-832
No recovery.	832-839
Clay, massive, silt (10 percent), mica (1-2 percent), medium dark gray (N4), lower contact not recovered.	839-840
No recovery.	840-849
Clay, laminated, laminae (40 percent, 2-4 mm thick) of very fine sand, mica (1-5 percent), sand-size grains of lignite (1-5 percent), pyrite and lignite fragments (1 percent, 10-20 mm), medium dark gray (N4), gradational lower contact.	849-852
Sand, fine to coarse, moderately to poorly sorted, loose, mica (1-2 percent), light gray (N7), lower contact not recovered, recovery 50 percent.	852-859
Clay, laminated, fragments (2-3 percent, 10-20 mm) of lignite and pyrite, medium dark gray (N4), lower contact not recovered.	859-860
No recovery.	860-864
Sand, medium to coarse, moderately sorted, loose, mica (1-2 percent, 1-2 mm), medium dark gray (N4) clay laminae (20 percent), yellowish gray (5Y7/2), sharp lower contact.	864-865
Clay, laminated, laminae (2-5 mm) of very fine sand (20-30 percent), mica (1-2 percent, 1-2 mm), medium dark gray (N4), gradational lower contact.	865-867
Sand, fine to medium with medium to coarse from 877 to 879 ft, moderately sorted, loose to clay-bound, clay matrix (0-10 percent), mica (2-5 percent, 1-3 mm), sand-size lignite (2-5 percent) in laminae and disseminated in sand, fragments (1-2 percent, 4-20 mm) of lignite and pyrite, laminated from 872 to 875 ft, yellowish gray (5Y7/2), sharp lower contact, recovery 85 percent.	867-879
Sand, very fine to fine, moderately sorted, loose, clay matrix (0-5 percent), mica (1-5 percent, 1-2 mm), mica (10-20 percent) and sand-size lignite (5-10 percent) from 896 to 898 ft, light olive gray (5Y6/1) to yellowish gray (5Y7/2) with laminae and thin beds (30-50 percent) of medium dark gray (N4) clay, lower contact not recovered, recovery 50 percent.	879-899
Sand, very fine to fine and fine to medium , moderately sorted, loose, laminae of medium dark gray (N4) clay (10-15 percent) and lignite (5 percent), mica (2-5 percent, 1-2 mm), cross-bedded from 900 to 907 ft, laminae and thin beds of sand with mica (5-20 percent) below 908 ft, light olive gray (5Y6/1), sharp lower contact, recovery 93 percent.	899-926
Sand, fine to very coarse, poorly sorted, loose, clasts of medium gray (N5) clay (5-10 mm), lignite (2-3 percent), sharp lower contact.	926-927
Sand, very fine to fine, moderately sorted, loose, mica (5-20 percent, 1-2 mm), sand-size lignite (2-5 percent), light olive gray (5Y6/1), laminae and thin beds of olive black (5Y2/1) clay (10-40 percent) below 931 ft, pyrite observed on surface of clay laminae, gradational lower contact.	927-934

APPENDIX—Continued

Lithologic description of Millhaven core, Screven County, Georgia—Continued
[Unless otherwise reported, core recovery is 100 percent; ft, foot; mm, grain size, in millimeters; 10R4/6, color code described by The Geological Society of America Rock Color Chart (Geological Society of America, 1991)]

Lithologic description	Depth below land surface, in feet
Clay, laminated, very fine sand (10 percent), mica (5-15 percent, 1-2 mm), olive black (5Y2/1), gradational lower contact.	934-937
Clay laminated with sand-filled burrows (5 percent) above 945 ft and sand-filled burrows (10-20 percent) below 945 ft, mica (2-5 percent), lignite (1-2 percent) and pyrite (1 percent) observed on bedding planes, dissolution of carbonate leaves imprints of pelecypods (3-5 percent) below 945 ft, pyrite nodule (20 mm) at 948 ft, laminae (10 mm) of very fine sand with mica (30 percent) at 949 ft, grayish black (N2) to olive black (5Y2/1), gradational lower contact.	937-953
Clay, laminated, pyrite (1-2 percent), mica (1-2 percent), imprints of pelecypods (1-2 percent), dikes of very fine sand with lignite and pyrite from 955 to 958 ft, carbonate matrix (less than 5 percent) below 965 ft, olive black (5Y2/1), gradational lower contact.	953-969
Clay, laminated, very fine sand (20-25 percent) from 969 to 971 ft, laminae of very fine sand (5 percent) below 975 ft, carbonate matrix (10 percent), mica (2-3 percent), pyrite (1-2 percent), lignite (1-2 percent), pelecypods (5-10 percent) below 971 ft, olive gray (5GY4/1), gradational lower contact.	969-978
Clay, wavy-laminated to burrow-mottled, very fine sand (20-25 percent), carbonate matrix (10-15 percent), pelecypods (5-10 percent), olive gray (5GY4/1), gradational lower contact.	978-986
Clay, laminated, laminae and lenses of very fine sand (5-10 percent), sand-filled burrows (less than 10 percent), mica (2-3 percent), lignite (1-2 percent) pelecypods (5-10 percent), carbonate matrix (10-15 percent), olive black (5Y2/1), gradational lower contact.	986-1,011
Clay, wavy-laminated to burrow-mottled, very fine sand (10-20 percent), carbonate matrix (10-15 percent), pelecypods (less than 5 percent), mica (1-2 percent), sand-size and fragments (2-10 mm) of lignite (2 percent), foraminifers observed on bedding planes (1-2 percent), olive black (5Y2/1), sharp lower contact.	1,011-1,025
Clay, laminated, carbonate matrix (10-15 percent), pelecypods (5 percent), other fossils below 1,034 ft include foraminifers, spicules, and sharks teeth, mica (1-2 percent), lenses and laminae of very fine sand (less than 5 percent), olive gray (5Y2/1), gradational lower contact.	1,025-1,040
Clay, wavy-laminated to burrow-mottled, soft sediment deformation of lenses and laminae of very fine to fine sand (10 percent), carbonate matrix (10-15 percent), very fine sand (15-25 percent), mica (2-3 percent), fossils (5-10 percent) from 1040 to 1045 ft include pelecypods, foraminifers, and spicules, olive black (5Y2/1), gradational lower contact.	1,040-1,045
Clay, wavy-laminated, amount of sand (25-25 percent) increasing with depth, carbonate matrix (10-15 percent), pyrite (1-2 percent), mica (1-2 percent), olive black (5Y2/1), gradational lower contact.	1,045-1,051
Sand, very fine to fine, moderately to well-sorted, loose to clay-bound, matrix of clay (5-20 percent) and carbonate (5-10 percent), mica (2 percent), shark teeth and clay clasts observed at 1052 ft, pelecypods at 1062 ft, glauconite (1 percent), olive gray (5Y4/1), gradational lower contact.	1,051-1,063
Clay, wavy-laminated to burrow-mottled, amount of very fine sand decreases with depth from 40 percent to less than 10 percent carbonate matrix (10-15 percent), mica (1-2 percent), glauconite (1 percent), olive gray (5Y4/1), gradational lower contact.	1,063-1,072

APPENDIX—Continued

Lithologic description of Millhaven core, Screven County, Georgia—Continued
[Unless otherwise reported, core recovery is 100 percent; ft, foot; mm, grain size, in millimeters; 10R4/6, color code described by The Geological Society of America Rock Color Chart (Geological Society of America, 1991)]

Lithologic description	Depth below land surface, in feet
Clay, laminated, very fine sand (5-10 percent), carbonate matrix (5-10 percent), fossils (5 percent) include small pelecypods, foraminifers, and spicules, lenses and laminae of very fine sand (5 percent), olive gray (5Y4/1), gradational lower contact.	1,072-1,078
Clay, wavy laminated, amount of sand increases with depth from 10 percent to 50 percent, carbonate matrix (5 percent), olive gray (5Y4/1), gradational lower contact.	1,079-1,084
Sand, very fine to fine, moderately sorted, clay-bound, matrix of clay (20-35 percent) and carbonate (0-2 percent), mica (2-3 percent, 1-2 mm), olive gray (5Y4/1), gradational lower contact.	1,084-1,092
Sand, fine to medium grading down to fine to very coarse with granules (5 percent), moderately to very poorly sorted, clay-bound to loose, clay matrix (10-15 percent), mica (2-3 percent, 1-2 mm), biogenic phosphate (1 percent, 2-4 mm), large fragment (20 mm) of lignite, olive gray (5Y4/1), sharp lower contact, recovery 75 percent.	1,092-1,100
No recovery.	1,100-1,112
Sand, medium to coarse grading down to medium to very coarse with granules (5-10 percent), moderately to poorly sorted, loose, garnet and black heavy minerals (1-2 percent), mica 1 percent, large fragments of lignite (1-2 percent), light olive gray (5Y6/1), sharp lower contact, recovery 65 percent.	1,112-1,119
Sand, very fine to fine, moderately sorted, loose, light olive gray (5Y6/1), interbedded with medium gray (N5) to dark greenish gray (5G4/1) clay (35-45 percent), laminae of mica (2-10 percent, 1-2 mm) and sand-size lignite (2-10 percent) in the beds of sand and clay, lower contact not recovered, recovery 77 percent.	1,119-1,130
No recovery.	1,130-1,139
Clay, laminated, silty (5-10 percent), greenish gray (5GY6/1) to dark greenish gray (5GY4/1), lower contact not recovered.	1,139-1,140
No recovery.	1,140-1,149
Sand, medium to coarse, poorly sorted, loose, mica (1 percent, -2 mm), garnet (1 percent), lower contact not recovered.	1,149-1,150
No recovery.	1,150-1,160
Sand, medium to very coarse with granules (5 percent) and pebbles (5 percent, 4-6 mm), abundant pebbles (25 percent) below 1168 ft, poorly to very poorly sorted, loose, light olive gray (5Y6/1), sharp lower contact, recovery 38 percent.	1,160-1,172
Clay, massive, silt and very fine sand (20 percent), light gray (N7), gradational lower contact.	1,172-1,173
Sand, very fine to fine, well-sorted to moderately sorted, loose to clay-bound, clay matrix (5-15 percent), mica (2-5 percent, 1-2 mm), medium dark gray (N4) clay laminae at 1,179 ft, very light gray (N8), sharp lower contact, recovery 50 percent.	1,173-1,181
Clay, massive, silt to very fine sand (5-30 percent), mica (2-3 percent), sand-filled fracture, olive gray (5Y4/1), gradational lower contact, recovery 38 percent.	1,181-1,197

APPENDIX—Continued

Lithologic description of Millhaven core, Screven County, Georgia—Continued
[Unless otherwise reported, core recovery is 100 percent; ft, foot; mm, grain size, in millimeters; 10R4/6, color code described by The Geological Society of America Rock Color Chart (Geological Society of America, 1991)]

Lithologic description	Depth below land surface, in feet
Sand, very fine to coarse, grading down to medium to very coarse, moderately to poorly sorted, loose to clay-bound, clay matrix (20-30 percent) above 1,199 ft, lignite (10-15 percent) and mica (5 percent) from 1,199 to 1,200 ft, light olive gray (5Y6/1) to olive black (5Y2/1), sharp lower contact, recovery 79 percent.	1,197-1,204
Clay, laminated to wavy-laminated to burrow-mottled, silt and very fine sand (20 percent), lignite (1-2 percent, 1-20 mm), pyrite (1 percent), large piece of pyrite and lignite at 1,231 ft, thin bed of very fine sand recovered at, 1211 ft, lower contact not recovered, recovery 20 percent.	1,204-1,240
No recovery.	1,240-1,249
Sand, fine to medium, moderately sorted, loose to clay bound, clay matrix (5-10 percent), silt (5-20 percent), mica (2-5 percent, 1 mm), sand- size lignite (1-2 percent), medium dark gray (N4), interlaminated with clayey (20 percent) silt and olive black (5Y2/1) clay from 1,250 to 1,252 ft, lower contact not recovered.	1,249-1,255
No recovery.	1,255-1,265
Sand, fine to medium and medium to very coarse with granules of clear and smoky quartz (5-10 percent), moderately to very poorly sorted, loose, sand-size lignite (1 percent), pieces of pyrite and lignite (1-2 percent), mica (1-2 percent, 1-2 mm), heavy minerals (1 percent) include garnet, a thin bed of olive black (5Y2/1) clay at 1267 ft, light olive gray (5Y6/1), lower contact not recovered.	1,265-1,272
No recovery.	1,272-1,279
Sand, fine to medium and fine to coarse, moderately to poorly sorted, loose, mica (1-3 percent, 1 mm), heavy minerals (1 percent) include garnet, large pieces of lignite (3-5 percent, as much as 35 percent at 1,281 ft), light olive gray (5Y6/1), lower contact not recovered.	1,279-1,281
No recovery.	1,281-1,289
Sand fine to coarse, poorly sorted, loose, mica (1 percent), heavy minerals (1 percent) include garnet, pieces of lignite and pyrite at 1,290 ft, light olive gray (5Y6/1), lower contact not recovered.	1,289-1,290
No recovery.	1,290-1,299
Sand, fine to medium and fine to coarse, moderately sorted, loose, clay matrix (0-10 percent), mica (1-2 percent), olive black (5Y2/1) clay laminae at 1,299 and 1,300 ft, light olive gray (5Y6/1) to very light gray (N8), lower contact not recovered.	1,299-1,301
No recovery.	1,301-1,308
Sand, fine to medium to fine to coarse, moderately to poorly sorted, loose, clay matrix (0-5 percent), laminae of dark gray (N3) clay with sand-size lignite, large piece of lignite and pyrite at 1,312 ft, mica (1-5 percent, 1-2 mm), lower contact not recovered.	1,308-1,312
No recovery.	1,312-1,318
Sand, fine grading down to fine to medium, well- sorted to moderately sorted, loose, mica (2-3 percent, 1-2 mm), with laminae (5 percent) of olive gray (5Y4/1) clay and lignite, light olive gray (5Y6/1), sharp lower contact.	1,318-1,319

APPENDIX—Continued

Lithologic description of Millhaven core, Screven County, Georgia—Continued
[Unless otherwise reported, core recovery is 100 percent; ft, foot; mm, grain size, in millimeters; 10R4/6, color code described by The Geological Society of America Rock Color Chart (Geological Society of America, 1991)]

Lithologic description	Depth below land surface, in feet
Sand, medium to very coarse, poorly sorted, loose, laminae of lignite and clay at 1,324 ft, mica (1-2 percent, 1-2 mm), light gray (N7), sharp lower contact, recovery 42 percent.	1,319-1,326
Sand, very fine to fine, moderately sorted, loose, laminae of sand-size lignite (1-2 percent), mica (1-2 percent, 1 mm), cross-bedded, very light gray (N8), sharp lower contact, recovery 50 percent.	1,326-1,331
Clay, laminated, pyrite (1 percent), mica (1-2 percent) and lignite (1 percent), olive black (5Y2/1), lower contact not recovered.	1,331-1,332
No recovery.	1,332-1,339
Sand, medium to very coarse with granules (2-3 percent) and pebbles (2-3 percent, 4-6 mm), poorly to very poorly sorted, loose, pieces of lignite (5 percent, 1-10 mm), heavy minerals (1 percent) include garnet, pyrite (1 percent), very light gray (N8), sharp lower contact.	1,339-1,341
Sand, fine to medium, moderately sorted, loose to clay- bound, clay matrix (0-5 percent, 10-30 percent below 1342 ft), sand-size lignite (1-2 percent), pieces of lignite (1-2 percent, 1-10 mm), laminae and thin beds of olive black (5Y2/1) clay, lower contact not recovered.	1,341-1,343
No recovery.	1,343-1,349
Clay, bedding disturbed in coring, pieces of lignite (5 percent, 10-20 mm) and pyrite-cemented sandstone, olive black (5Y2/1), underlain by fine to coarse sand with granules (2-3 percent), poorly sorted, clay-bound, clay matrix (20 percent), mica (1-2 percent, 1 mm), light olive gray (5Y6/1), lower contact not recovered.	1,349-1,350
No recovery.	1,350-1,359
Sand, medium to coarse, moderately sorted, loose, clay matrix (0-5 percent), sand-size pyrite (1 percent), mica (1 percent), light gray (N7) to white (N9), lower contact not recovered.	1,359-1,361
No recovery.	1,361-1,369
Clay, massive, dense, waxy, fine to medium sand (35-45 percent), pyrite (2-3 percent) at 1,369 ft, light gray (N7) to light olive gray, gradational lower contact.	1,369-1,372
Sand, very fine to fine, moderately sorted, clay-bound, clay matrix (20 percent), grading down to medium to very coarse, poorly sorted, loose, heavy minerals include amber-colored grains (1-2 percent), pyrite cement in part, light gray (N7) and light olive gray (5Y6/1), lower contact not recovered.	1,372-1,374
No recovery.	1,374-1,379
Sand, very fine to fine grading down to medium to very coarse with granules (5 percent) and pebbles (5 percent, 4-10 mm), moderately to very poorly sorted, friable, clay matrix (15-25 percent), mica (2-3 percent, 2-3 mm), pebbles of feldspar, smoky quartz, and yellow quartz, pyrite (1-2 percent), dark reddish brown heavy minerals, light gray (N7) to greenish gray (5GY6/1), sharp lower contact.	1,379-1,386
Clay, massive, waxy, very fine to medium sand (10-20 percent), olive gray (5Y4/1) with patchy and root-like pattern of dusky yellow (5Y6/4) and moderate brown (5YR4/4) staining, gradational lower contact.	1,386-1,392

APPENDIX—Continued

Lithologic description of Millhaven core, Screven County, Georgia—Continued
[Unless otherwise reported, core recovery is 100 percent; ft, foot; mm, grain size, in millimeters; 10R4/6, color code described by The Geological Society of America Rock Color Chart (Geological Society of America, 1991)]

Lithologic description	Depth below land surface, in feet
Sand, very fine to fine grading rapidly down to medium to very coarse with granules (10-15 percent) and pebbles (5-10 percent, 4-10 mm), moderately to very poorly sorted, friable, clay matrix (15-20 percent), clay laminae (1-2 percent), feldspar (5-10 percent), mica (1-2 percent, 1-2 mm), pale olive gray (10Y6/2) to light olive gray (5Y6/1), sharp lower contact.	1,392-1,397
Sand, medium to coarse with a few large pebbles (5 percent, 10-20 mm), moderately to poorly sorted, loose, clay matrix (5 percent), feldspar (5-10 percent), mica (2-5 percent), pale olive gray (10Y6/2) light olive gray (5Y6/1), lower contact not recovered.	1,397-1,400
No recovery.	1,400-1,409
Sand, medium to very coarse with pebbles (5-10 percent) of quartz, smoky quartz, yellow quartz and feldspar, very poorly sorted, friable, clay matrix (15-25 percent), feldspar (5-10 percent), mica (1-2 percent), black and dark brown heavy minerals (1 percent) in laminae at 1,412 ft, light olive gray (5Y6/1) to pale olive gray (10Y6/2), sharp lower contact.	1,409-1,412
Clay, massive, waxy, fine to coarse sand (10-20 percent), very light gray (5Y6/1) to olive gray (5Y4/1) with patchy dusky yellow (5Y5/4) and dark reddish brown (10R3/4) staining, gradational lower contact.	1,412-1,414
Sand, fine to very coarse with granules (10 percent) above 1,419 ft, and granules (20-40 percent) and pebbles (5-10 percent, 4-10 mm) below 1,419 ft, very poorly sorted, friable, clay matrix 15-30 percent, olive gray (5Y5/2), patchy dusky yellow (5Y6/4) staining, lower contact not recovered, recovery 90 percent.	1,414-1,425
Clay, massive, waxy, fine to coarse sand (20-30 percent), light gray (N7) to pale olive (10Y6/2) with patchy dusky yellow (5Y6/4) and dark reddish brown (10R3/4) staining, gradational lower contact.	1,425-1,431
Sand, medium to very coarse, poorly sorted, friable, clay matrix (15-20 percent), pale olive (10Y6/2), sharp lower contact.	1431-1432
Silt, massive, clay (20-30 percent), very fine sand (10-20 percent), light olive gray (5Y6/1) mottled with dusky yellow (5Y6/4) and dark reddish brown (10R3/4), gradational lower contact.	1,432-1,435
Sand, very fine to fine grading down to fine-to-coarse , well sorted to poorly sorted, friable, silt (10 percent), clay matrix (5-15 percent), mica (1 percent), black and amber-colored heavy minerals (2-3 percent) at 1,444 ft, light olive gray (5Y6/1) with patchy dusky yellow (5Y6/4) staining, sharp lower contact.	1,435-1,444
Clay massive, waxy, fine to coarse sand (10-15 percent), silt (10 percent), greenish gray (5GY6/1) with patches of dark reddish brown (10R3/4) and dusky yellow (5Y6/4) staining, lower contact not recovered, recovery 38 percent	1,444-1,452

Editor: Carolyn Casteel

The Department of Natural Resources is an equal opportunity employer and offers all persons the opportunity to compete and participate in each area of DNR employment regardless of race, color, religion, national origin, age, handicap, or other non-merit factors.